US009230221B2

(12) **United States Patent**
Gobert et al.

(10) **Patent No.: US 9,230,221 B2**
(45) **Date of Patent: Jan. 5, 2016**

(54) **INSTRUCTION SYSTEM WITH EYETRACKING-BASED ADAPTIVE SCAFFOLDING**

(71) Applicant: **Worcester Polytechnic Institute**, Worcester, MA (US)

(72) Inventors: **Janice D. Gobert**, Stow, MA (US); **Ermal Toto**, Worcester, MA (US)

(73) Assignee: **Worcester Polytechnic Institute**, Worcester, MA (US)

(*) Notice: Subject to any disclaimer, the term of this patent is extended or adjusted under 35 U.S.C. 154(b) by 178 days.

(21) Appl. No.: **13/774,981**

(22) Filed: **Feb. 22, 2013**

(65) **Prior Publication Data**

US 2013/0226845 A1 Aug. 29, 2013

Related U.S. Application Data

(60) Provisional application No. 61/602,434, filed on Feb. 23, 2012.

(51) **Int. Cl.**

G06N 5/00	(2006.01)
G06F 1/00	(2006.01)
G06N 99/00	(2010.01)
G09B 7/04	(2006.01)
G09B 19/00	(2006.01)

(52) **U.S. Cl.**

CPC ***G06N 99/005*** (2013.01); ***G09B 7/04*** (2013.01); ***G09B 19/00*** (2013.01)

(58) **Field of Classification Search**

None

See application file for complete search history.

(56) **References Cited**

U.S. PATENT DOCUMENTS

6,634,887	B1	10/2003	Heffernan, III et al.	
2010/0092929	A1	4/2010	Hallowell et al.	
2010/0313048	A1 *	12/2010	Shye et al.	713/320
2011/0256520	A1	10/2011	Siefert	
2011/0270123	A1 *	11/2011	Reiner	600/558
2012/0094700	A1 *	4/2012	Karmarkar et al.	455/466

FOREIGN PATENT DOCUMENTS

CA	2864166	A1	8/2013
WO	WO 2013/126812		8/2013

OTHER PUBLICATIONS

International Preliminary Report on Patentability for International Application No. PCT/US2013/027478, "An Instructional System with Eye-Tracking-Based Adaptive Scaffolding". Date of Mailing Aug. 26, 2014.

(Continued)

Primary Examiner — Stanley K Hill
Assistant Examiner — Kalpana Bharadwaj
(74) *Attorney, Agent, or Firm* — Hamilton, Brook, Smith & Reynolds, P.C.

(57) **ABSTRACT**

A digital instructional environment leverages an infrared eye-tracker to monitor a learner's reading and viewing of text and simulations for subject matter. The system detects out-of-order reading/viewing patterns that could lead to poor comprehension. The digital learning environment communicates with other tutorial components including simulation environments, pedagogical agents and may respond in real-time to such patterns with messages that guide learners (knowledge acquirers) to return to effective reading/viewing patterns so as to promote effective construction of mental model(s) developed during knowledge acquisition/learning.

20 Claims, 12 Drawing Sheets

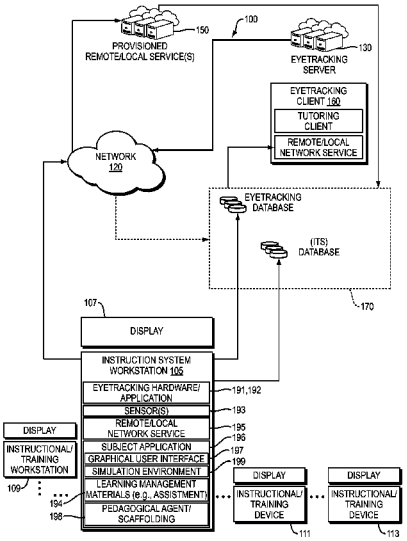

(56) **References Cited**

OTHER PUBLICATIONS

U.S. Department of Education, Office of Educational Technology, "Enhancing Teaching and Learning Through Educational Data Mining and Learning Analytics: An Issue Brief," Washington, D.C., 2012.

Baker, R.S.J.d. (in press), "Data Mining for Education." To appear in McGaw, B., Peterson, P., Baker, Ed. (Eds.) *International Encyclopedia of Education* (3rd edition). Oxford, UK: Elsevier.

Graesser, A. and McNamara, D., "Self-Regulated Learning in Learning Environments with Pedagogical Agents That Interact in Natural Language," *Educational Psychologist*, 45(4):234-244 (2010).

Anjewierden, A., et al., "Brick: Mining Pedagogically Interesting Sequential Patterns," This study was conducted in the context of Science Created by You (SCY), which is funded by the European Community under the Information and Communication Technologies (ICT) theme of the 7th Framework Programme for R&D (Grant agreement 212814).

Kim, Y., et al., "Creating Pedagogical Agents as Social Models in an Online Learning Environment *MathGirls," International Transactions on Systems Science and Applications*, 4(1):99-106 (2008).

Baker, R.S.J.d., et al., "Adapting to When Students Game an Intelligent Tutoring System," Learning Sciences Research Institute, University of Nottingham.

Robison, J.L., et al., "Modeling Task-Based vs. Affect-Based Feedback Behavior in Pedagogical Agents: An Inductive Approach," *Artificial Intelligence in Education V. Dimitrova et al. (Eds.), IOS Press*, 25-32 (2009).

Ketelhut, D.J., et al., "A Multi-User Virtual Environment for Building and Assessing Higher Order Inquiry Skills in Science," *British Journal of Educational Technology*, 41(1):56-68 (2010).

Hassanzadeh Nezami, S., "A Study of Errors, Corrective Feedback and Noticing in Synchronous Computer Mediated Communication," Linköping University (2012).

Williams, K. C., "Business Intuition: The Mortar Among the Bricks of Analysis," *Journal of Management Policy and Practice*, 13(5): 48-65 (2012).

Gidlöf, K., et al., "Using Eye Tracking to Trace a Cognitive Process: Gaze Behavior During Decision Making in a Natural Environment," *Journal of Eye Movement Research*, 6(1):3: 1-14 (2013).

Rowntree, J., "The Role of Experience in the Susceptibility to Confirmation Bias in Pilots," Massey University, Albany, New Zealand (2012).

Ducrot, S., et al., "Visual and Linguistic Determinants of the Eyes' Initial Fixation Position in Reading Development," *Acta Psychologica*, 142(3):287-298 (2013).

Bi, L., et al., "EEG-Based Brain-Controlled Mobile Robots: A Survey," *IEEE Transactions on Human-Machine Systems*. 43(2):161-176 (2013).

Ando, J., "Human Genetic Variation and Education: An Evolutionary Perspective," *Neuroscience, International Journal of Psychology*, 47(sup 1): 582-593 (2012).

Notification of Transmittal of The International Search Report and The Written Opinion of the International Search Report and The Written Opinion of the International Searching Authority, or the Declaration, Application No. PCT/US2013/027478, "An Instructional System with Eye-Tracking-Based Adaptive Scaffolding", Date of Mailing May 24, 2013 8 pages.

Kauffman-Rogoff, Zakkai, "An Intelligent Tutoring System with Eyetracking-based Scaffolding," Apr. 2011, 75 pgs.

Flight Safety Simulation, "Matrix: Systems Integration for Seamless Training," Nov. 1996, Retrieved from the Internet URL: https ://www. flightsafety.com/fs_service_simulation_systems_cat.php?p=mat.

Sandia National Laboratories, "Airports Can Become Safer Through Eye Tracking and Other Studies," Jul. 2014, Retrieved from the Internet URL: http://www.eyegaze.com/airports-can-become-safer-through-eye-tracking-and-other-studies/.

IATATraining, "Aviation Security Training Courses," Dec. 2012, Retrieved from the Internet URL: http://www.iata.org/training/subject-areas/pages/security-courses.aspx.

Tobii Pro, Tobii Glasses, "Eye Tracking in Flight Control Environment," Retrieved from the Internet URL: http://www.tobii.com/en/eye-tracking-research/global/library/videos/tobii-glasses/eye-tracking-in-flight-control-environment/ on Sep. 2015.

FlightSafety Inernational, Inc., "Training Begins Here," Oct. 2013, Retrieved from the Internet URL: https://www.flightsafety.com/fs_index.php?sw=1440&sh=900.

FlightSafety International, "Simulators, Displays and Visual Systems," Retrieved Sep. 2015 from the Internet URL: http://resources.flightsafety.com/PDFs/military/FlightSafety_Military_Government_Simulators.pdf.

Chetwood, A.S., et al., "Collaborative eye tracking: a potential training tool in laparoscopic surgery," PubMed-NCBI, Jan. 2012, Retrieved from the Internet URL: http://www.ncbi.nlm.nih.gov/pubmed/22258302.

Jamco Engineering, Inc., "Specializing in Custom Radiography Equipment," Apr. 2001, Retrieved from the Internet URL: http://jamcoengineering.com/.

PSFK, Ideas for Innovation, "Eye-Tracking Car Tech Will Help Drivers Remain Focused," Feb. 2015, Retrieved from the Internet URL: http://www.psfk.com/2015/02/seeing-machines-car-tech-safe-fovio.html.

* cited by examiner

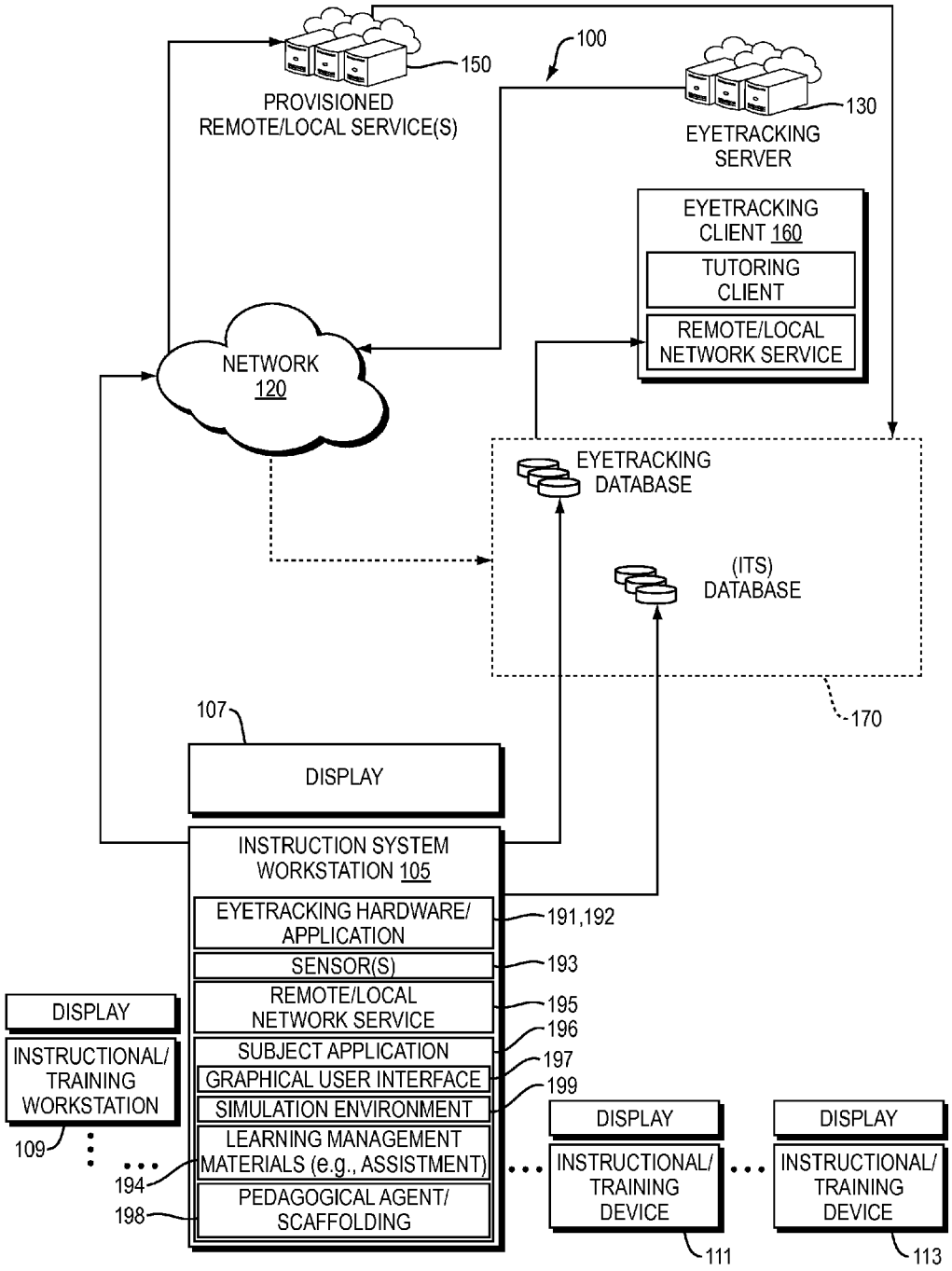
PROVISIONED REMOTE/LOCAL SERVICE(S)
150
100
EYETRACKING SERVER
130
EYETRACKING CLIENT 160
TUTORING CLIENT
REMOTE/LOCAL NETWORK SERVICE
NETWORK 120
EYETRACKING DATABASE
(ITS) DATABASE
170
107
DISPLAY
INSTRUCTION SYSTEM WORKSTATION 105
EYETRACKING HARDWARE/ APPLICATION
191,192
SENSOR(S)
193
REMOTE/LOCAL NETWORK SERVICE
195
SUBJECT APPLICATION
196
GRAPHICAL USER INTERFACE
197
SIMULATION ENVIRONMENT
199
LEARNING MANAGEMENT MATERIALS (e.g., ASSISTMENT)
194
PEDAGOGICAL AGENT/ SCAFFOLDING
198
DISPLAY
INSTRUCTIONAL/ TRAINING WORKSTATION
109
DISPLAY
INSTRUCTIONAL/ TRAINING DEVICE
111
DISPLAY
INSTRUCTIONAL/ TRAINING DEVICE
113

FIG. 1

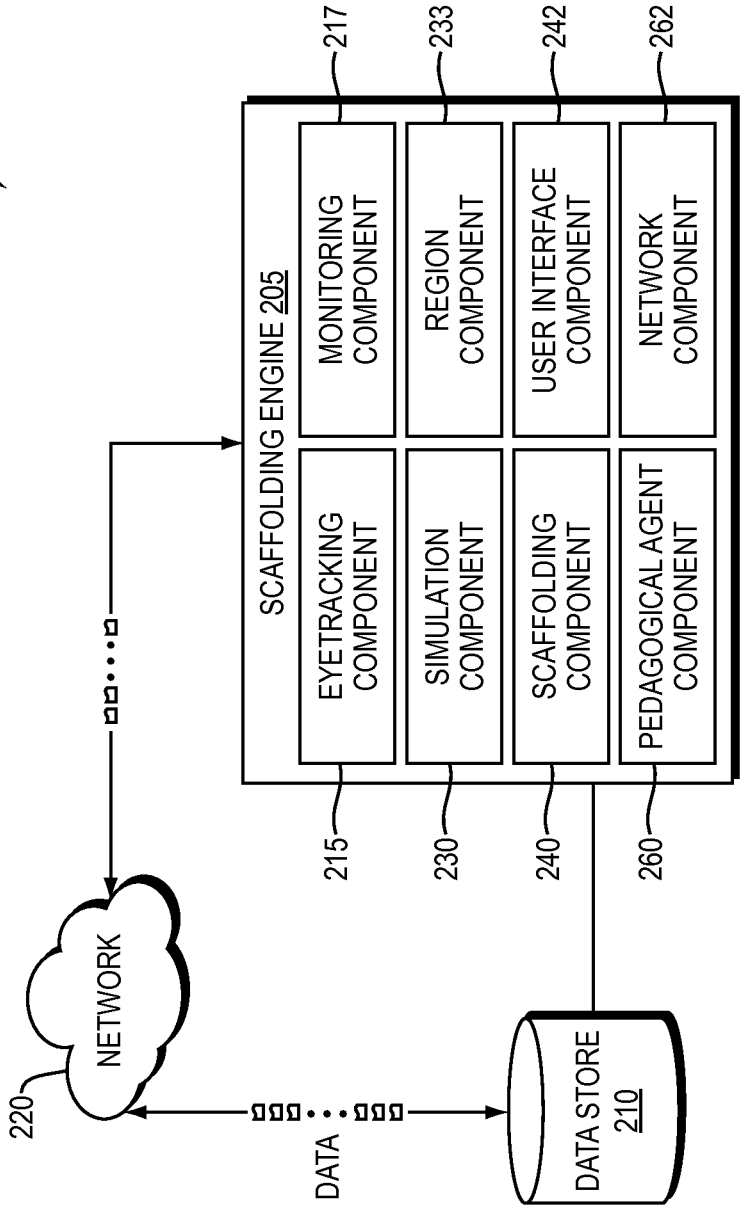
200
SCAFFOLDING ENGINE 205
MONITORING COMPONENT
REGION COMPONENT
USER INTERFACE COMPONENT
NETWORK COMPONENT
EYETRACKING COMPONENT
SIMULATION COMPONENT
SCAFFOLDING COMPONENT
PEDAGOGICAL AGENT COMPONENT
217
233
242
262
215
230
240
260
NETWORK
220
DATA
DATA STORE 210

FIG. 2

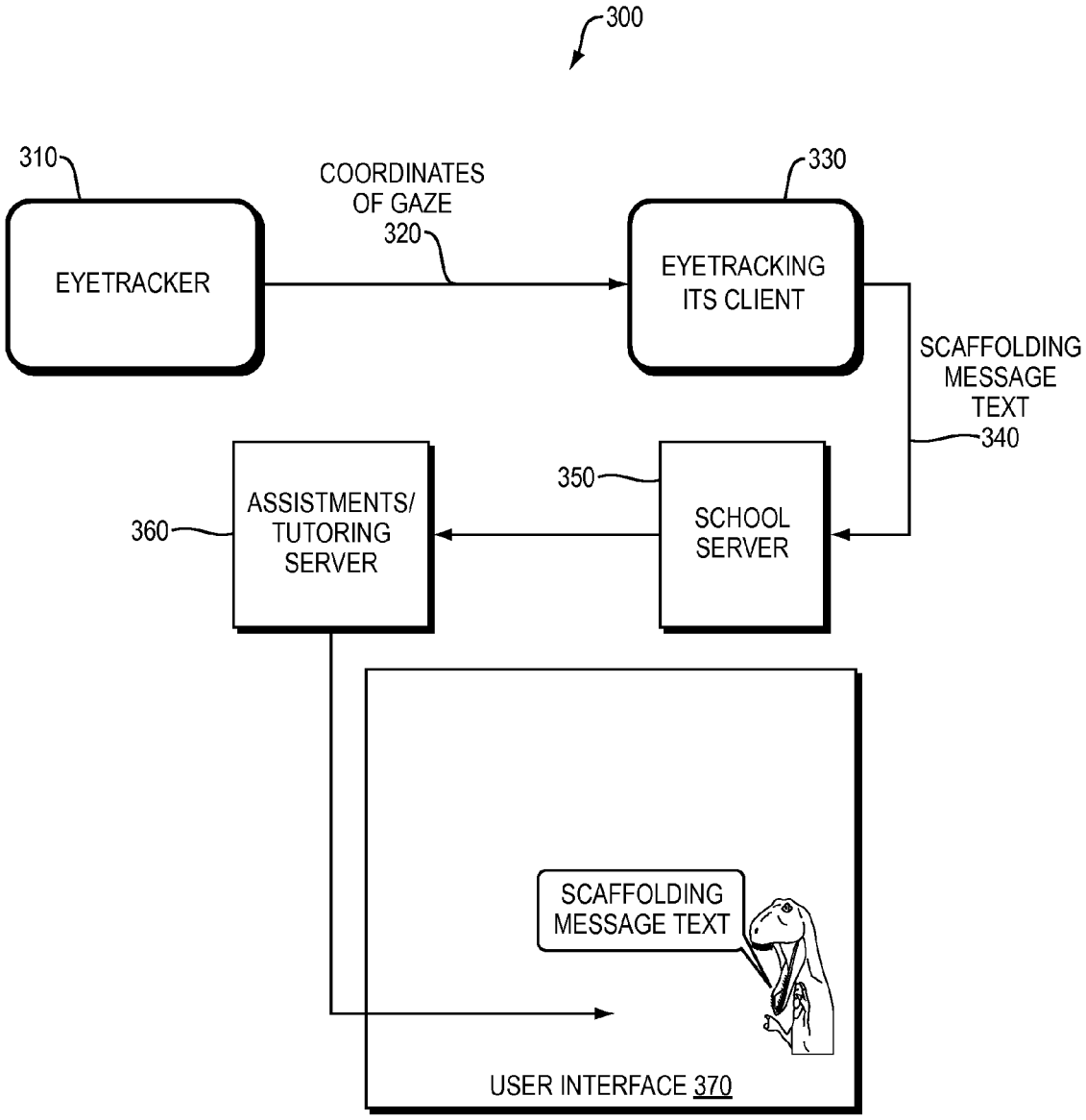
300
310
EYETRACKER
COORDINATES OF GAZE
320
330
EYETRACKING ITS CLIENT
SCAFFOLDING MESSAGE TEXT
340
350
SCHOOL SERVER
360
ASSISTMENTS/ TUTORING SERVER
SCAFFOLDING MESSAGE TEXT
USER INTERFACE 370

FIG. 3

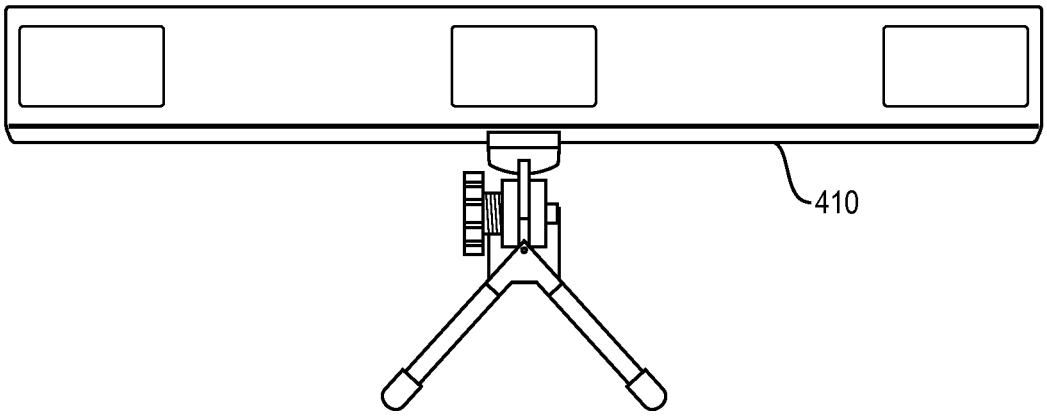

FIG. 4A

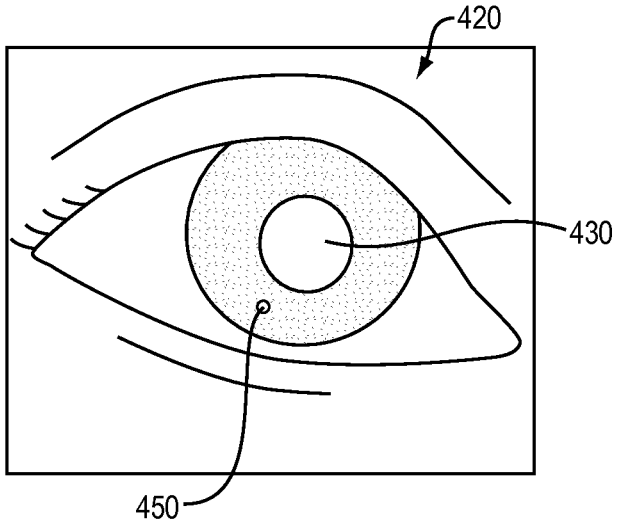

FIG. 4B

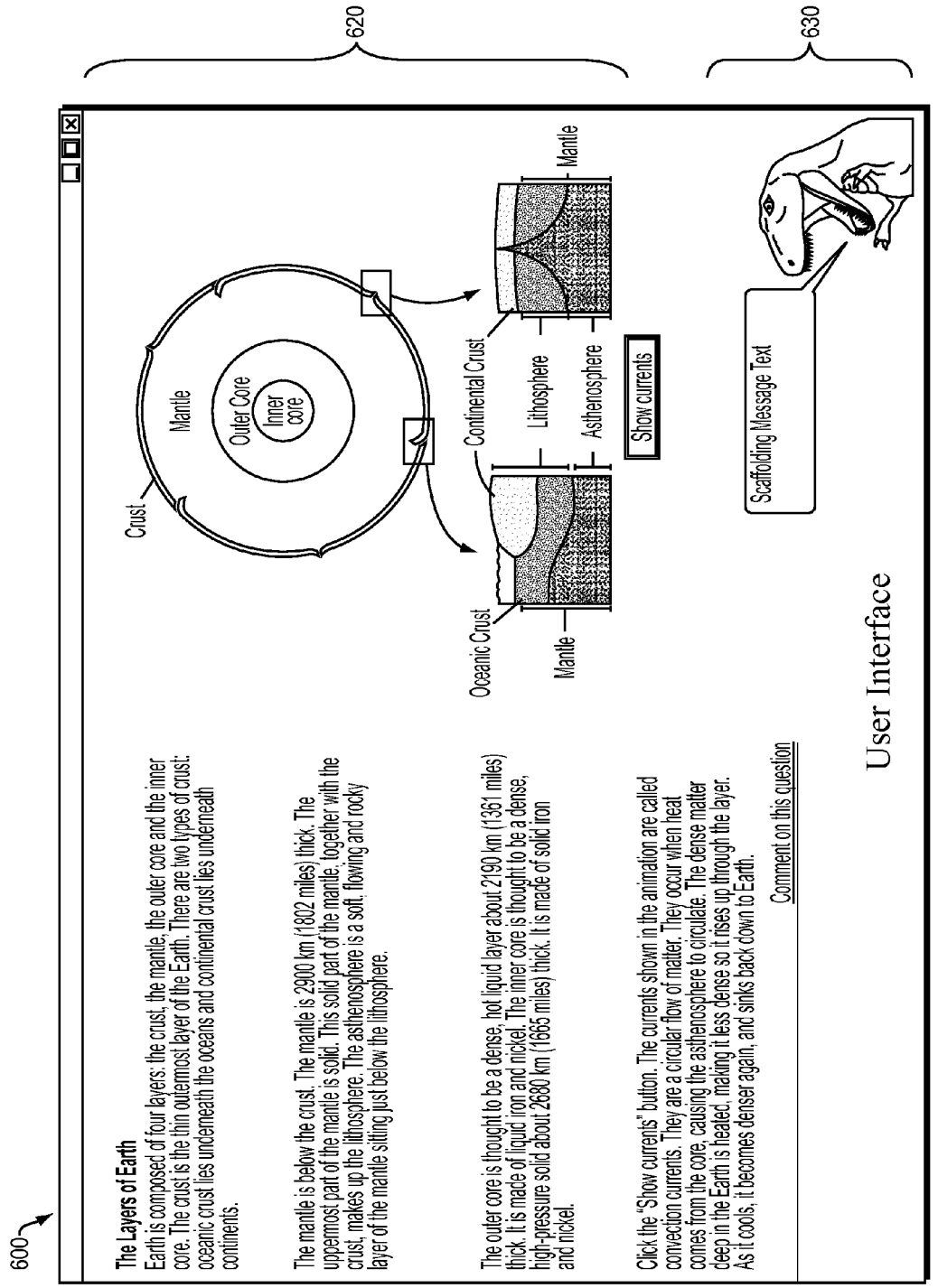
600
620
630
610
The Layers of Earth
Earth is composed of four layers: the crust, the mantle, the outer core and the inner core. The crust is the thin outermost layer of the Earth. There are two types of crust: oceanic crust lies underneath the oceans and continental crust lies underneath continents.
The mantle is below the crust. The mantle is 2900 km (1802 miles) thick. The uppermost part of the mantle is solid. This solid part of the mantle, together with the crust, makes up the lithosphere. The asthenosphere is a soft, flowing and rocky layer of the mantle sitting just below the lithosphere.
The outer core is thought to be a dense, hot liquid layer about 2190 km (1361 miles) thick. It is made of liquid iron and nickel. The inner core is thought to be a dense, high-pressure solid about 2680 km (1665 miles) thick. It is made of solid iron and nickel.
Click the "Show currents" button. The currents shown in the animation are called convection currents. They are a circular flow of matter. They occur when heat comes from the core, causing the asthenosphere to circulate. The dense matter deep in the Earth is heated, making it less dense so it rises up through the layer. As it cools, it becomes denser again, and sinks back down to Earth.
Comment on this question
Crust
Mantle
Outer Core
Inner core
Oceanic Crust
Mantle
Continental Crust
Lithosphere
Asthenosphere
Mantle
Show currents
Scaffolding Message Text
User Interface

FIG. 5

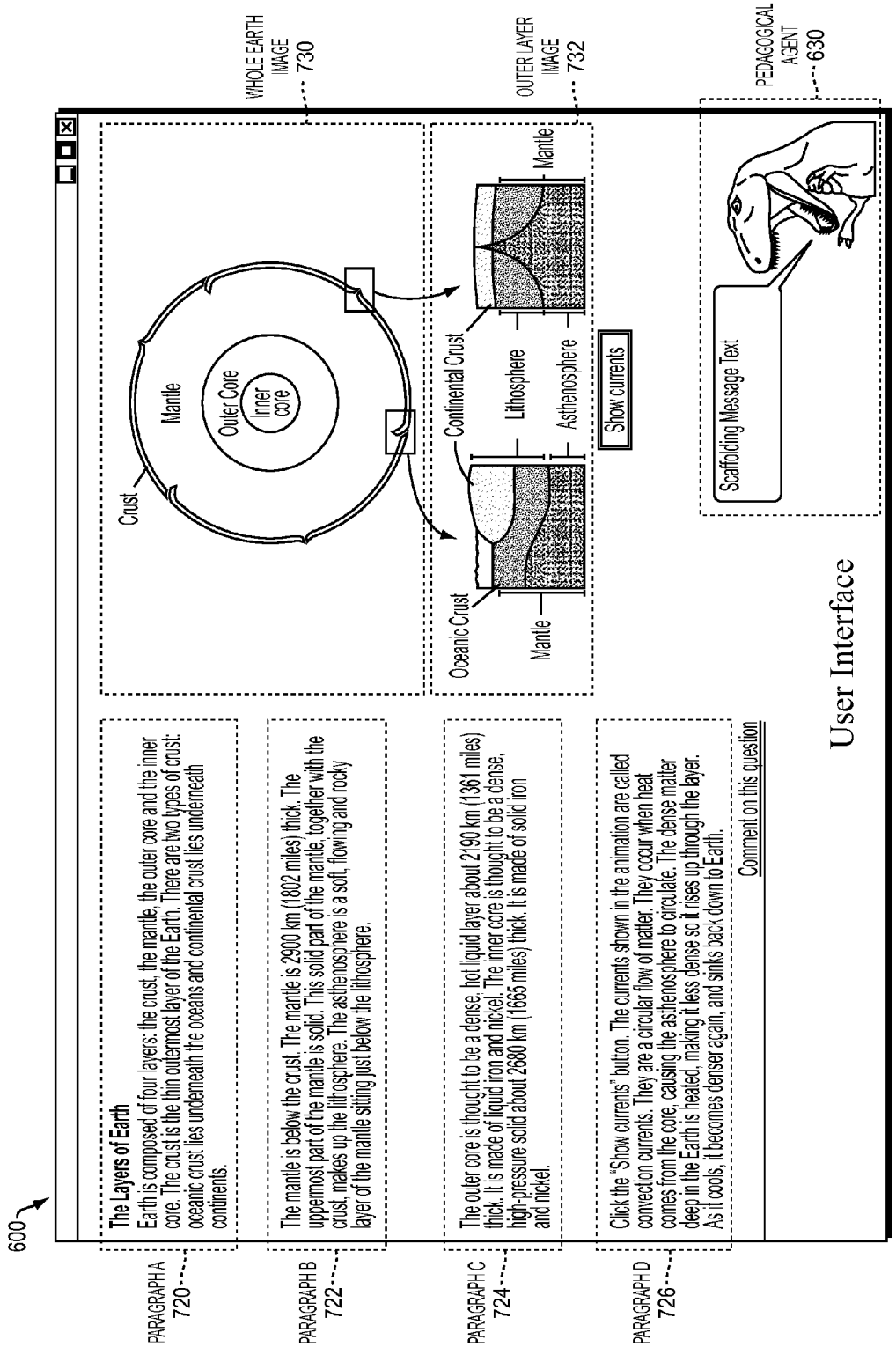
600
PARAGRAPH A 720
PARAGRAPH B 722
PARAGRAPH C 724
PARAGRAPH D 726
The Layers of Earth
Earth is composed of four layers: the crust, the mantle, the outer core and the inner core. The crust is the thin outermost layer of the Earth. There are two types of crust: oceanic crust lies underneath the oceans and continental crust lies underneath continents.
The mantle is below the crust. The mantle is 2900 km (1802 miles) thick. The uppermost part of the mantle is solid. This solid part of the mantle, together with the crust, makes up the lithosphere. The asthenosphere is a soft, flowing and rocky layer of the mantle sitting just below the lithosphere.
The outer core is thought to be a dense, hot liquid layer about 2190 km (1361 miles) thick. It is made of liquid iron and nickel. The inner core is thought to be a dense, high-pressure solid about 2680 km (1665 miles) thick. It is made of solid iron and nickel.
Click the "Show currents" button. The currents shown in the animation are called convection currents. They are a circular flow of matter. They occur when heat comes from the core, causing the asthenosphere to circulate. The dense matter deep in the Earth is heated, making it less dense so it rises up through the layer. As it cools, it becomes denser again, and sinks back down to Earth.
Comment on this question
WHOLE EARTH IMAGE 730
Crust
Mantle
Outer Core
Inner core
OUTER LAYER IMAGE 732
Continental Crust
Lithosphere
Mantle
Asthenosphere
Oceanic Crust
Mantle
Show currents
PEDAGOGICAL AGENT 630
Scaffolding Message Text
User Interface

FIG. 6

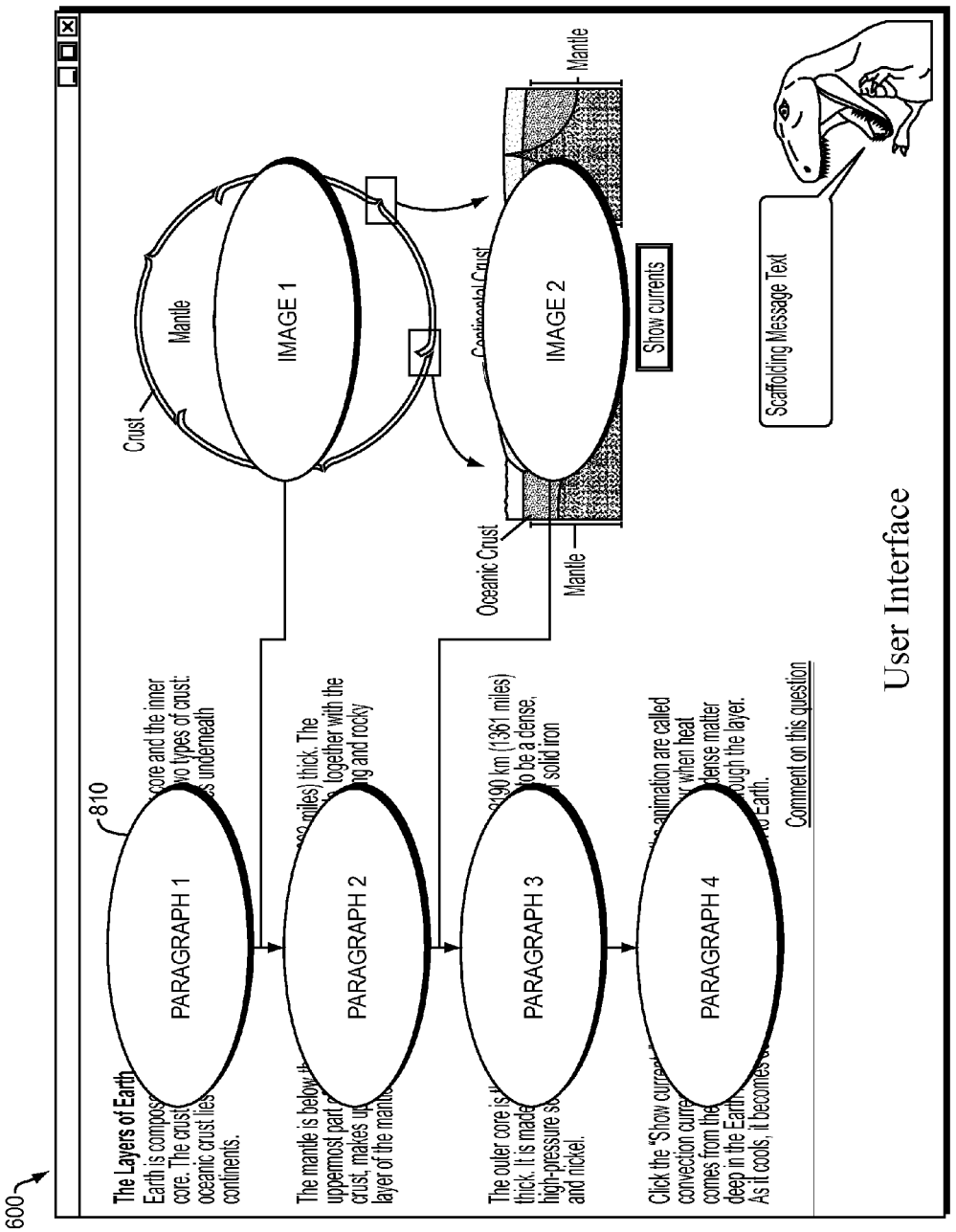
600
810
The Layers of Earth
PARAGRAPH 1
PARAGRAPH 2
PARAGRAPH 3
PARAGRAPH 4
Crust
Mantle
IMAGE 1
Oceanic Crust
Mantle
IMAGE 2
Show currents
Scaffolding Message Text
Comment on this question
User Interface

FIG. 7

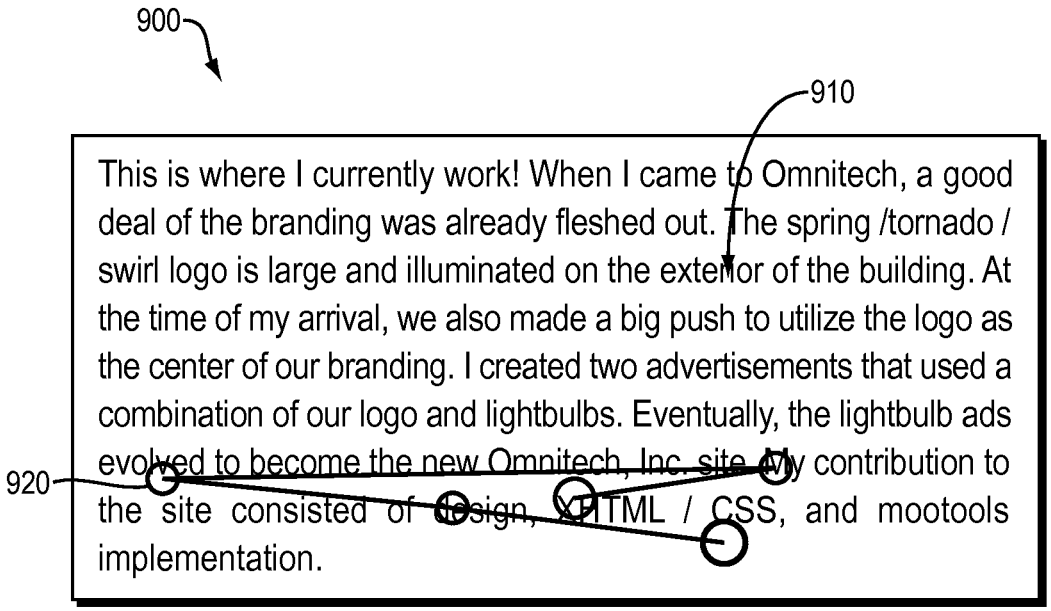
900
910
This is where I currently work! When I came to Omnitech, a good deal of the branding was already fleshed out. The spring /tornado / swirl logo is large and illuminated on the exterior of the building. At the time of my arrival, we also made a big push to utilize the logo as the center of our branding. I created two advertisements that used a combination of our logo and lightbulbs. Eventually, the lightbulb ads evolved to become the new Omnitech, Inc. site. My contribution to the site consisted of design, XHTML / CSS, and mootools implementation.
920

FIG. 8

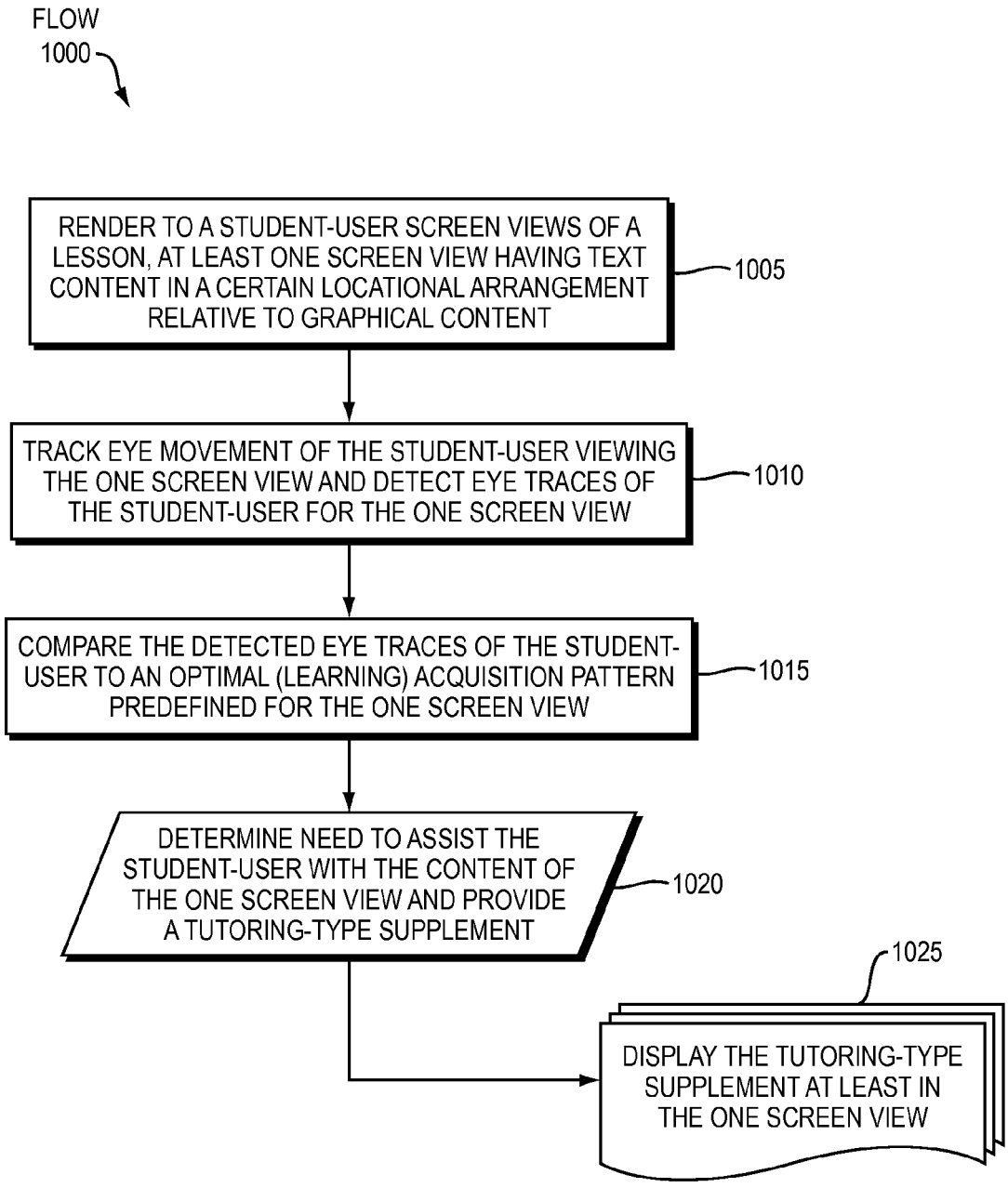
FLOW
1000
RENDER TO A STUDENT-USER SCREEN VIEWS OF A LESSON, AT LEAST ONE SCREEN VIEW HAVING TEXT CONTENT IN A CERTAIN LOCATIONAL ARRANGEMENT RELATIVE TO GRAPHICAL CONTENT
1005
TRACK EYE MOVEMENT OF THE STUDENT-USER VIEWING THE ONE SCREEN VIEW AND DETECT EYE TRACES OF THE STUDENT-USER FOR THE ONE SCREEN VIEW
1010
COMPARE THE DETECTED EYE TRACES OF THE STUDENT-USER TO AN OPTIMAL (LEARNING) ACQUISITION PATTERN PREDEFINED FOR THE ONE SCREEN VIEW
1015
DETERMINE NEED TO ASSIST THE STUDENT-USER WITH THE CONTENT OF THE ONE SCREEN VIEW AND PROVIDE A TUTORING-TYPE SUPPLEMENT
1020
1025
DISPLAY THE TUTORING-TYPE SUPPLEMENT AT LEAST IN THE ONE SCREEN VIEW

FIG. 9

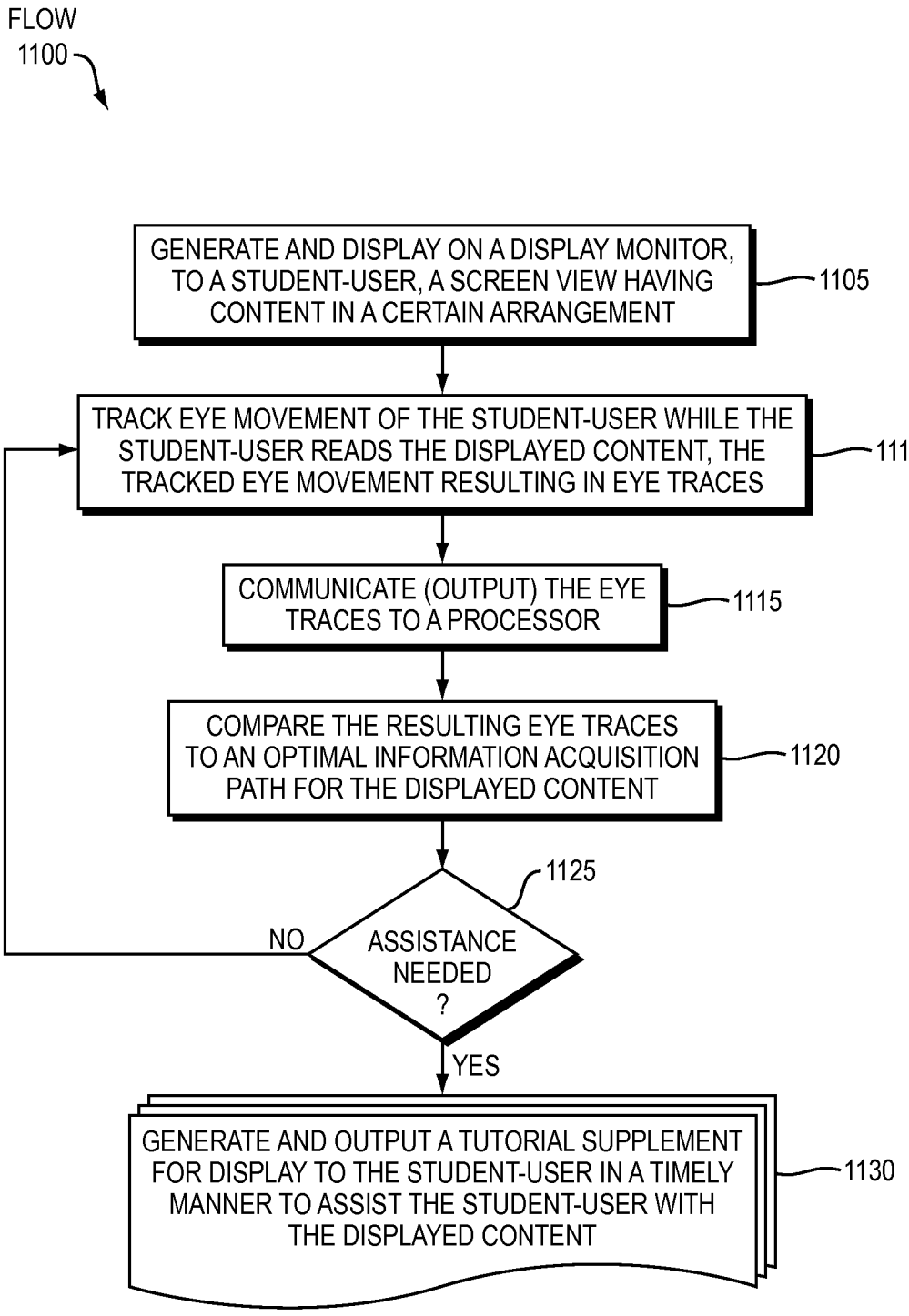
FLOW
1100
GENERATE AND DISPLAY ON A DISPLAY MONITOR, TO A STUDENT-USER, A SCREEN VIEW HAVING CONTENT IN A CERTAIN ARRANGEMENT
1105
TRACK EYE MOVEMENT OF THE STUDENT-USER WHILE THE STUDENT-USER READS THE DISPLAYED CONTENT, THE TRACKED EYE MOVEMENT RESULTING IN EYE TRACES
1110
COMMUNICATE (OUTPUT) THE EYE TRACES TO A PROCESSOR
1115
COMPARE THE RESULTING EYE TRACES TO AN OPTIMAL INFORMATION ACQUISITION PATH FOR THE DISPLAYED CONTENT
1120
1125
ASSISTANCE NEEDED ?
NO
YES
GENERATE AND OUTPUT A TUTORIAL SUPPLEMENT FOR DISPLAY TO THE STUDENT-USER IN A TIMELY MANNER TO ASSIST THE STUDENT-USER WITH THE DISPLAYED CONTENT
1130

FIG. 10

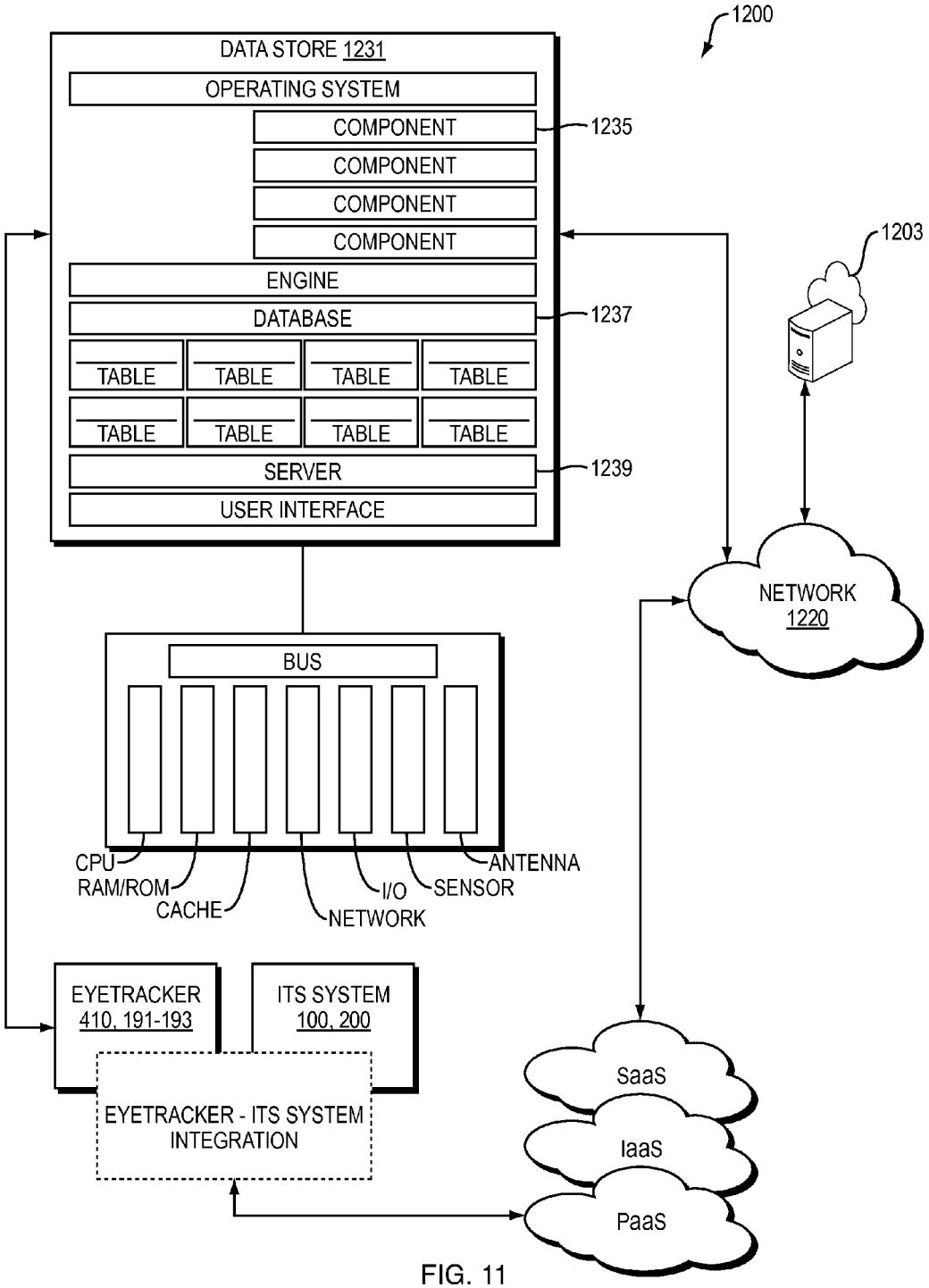
1200
DATA STORE 1231
OPERATING SYSTEM
COMPONENT
1235
COMPONENT
COMPONENT
COMPONENT
ENGINE
DATABASE
1237
TABLE
TABLE
TABLE
TABLE
TABLE
TABLE
TABLE
TABLE
SERVER
1239
USER INTERFACE
1203
NETWORK
1220
BUS
CPU
RAM/ROM
CACHE
NETWORK
I/O
SENSOR
ANTENNA
EYETRACKER
410, 191-193
ITS SYSTEM
100, 200
EYETRACKER - ITS SYSTEM
INTEGRATION
SaaS
IaaS
PaaS

FIG. 11

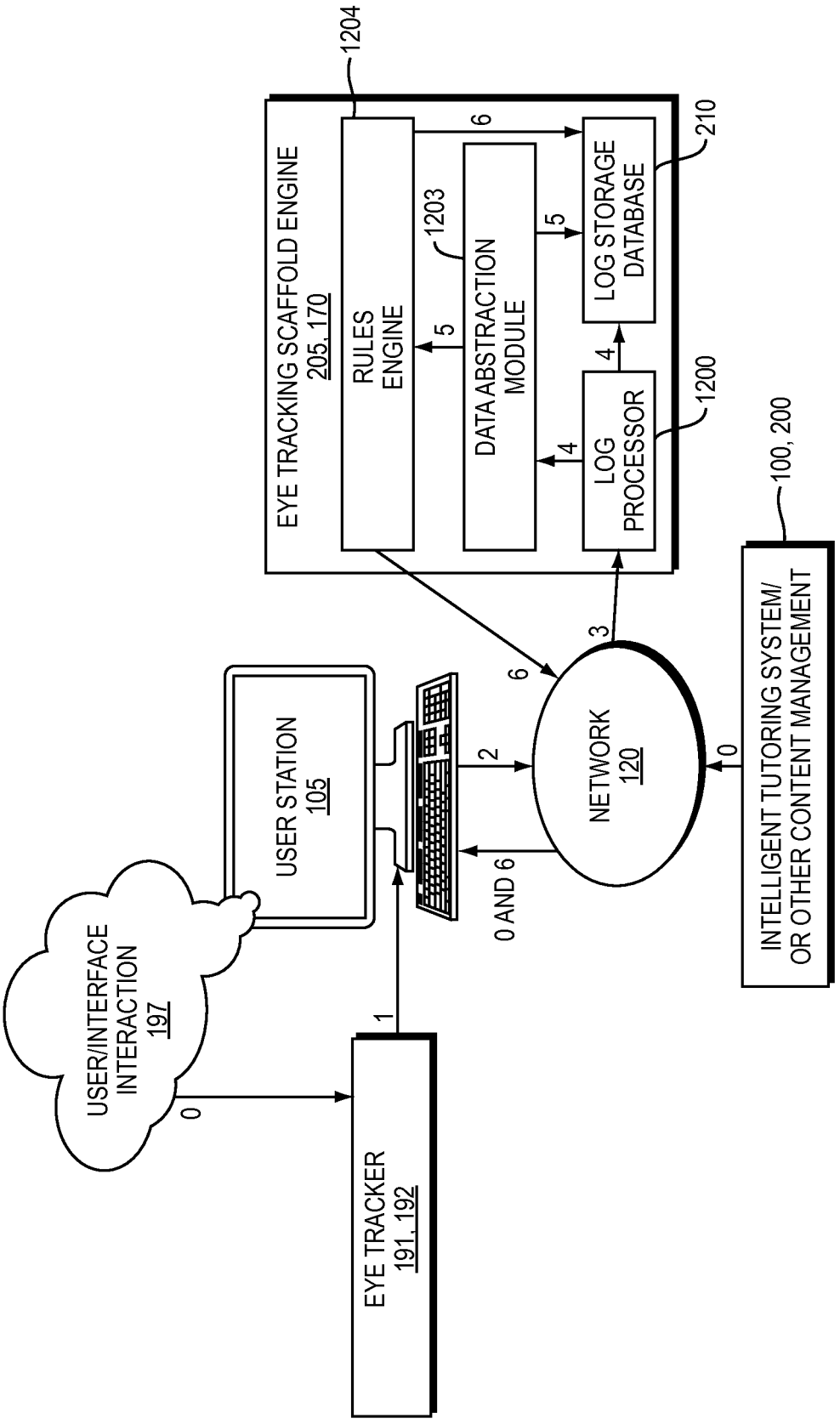
EYE TRACKING SCAFFOLD ENGINE
205, 170
1204
RULES ENGINE
1203
DATA ABSTRACTION MODULE
LOG STORAGE DATABASE
210
LOG PROCESSOR
1200
6
5
5
4
4
3
6
USER STATION
105
NETWORK
120
2
0 AND 6
0
INTELLIGENT TUTORING SYSTEM/
OR OTHER CONTENT MANAGEMENT
100, 200
USER/INTERFACE
INTERACTION
197
0
1
EYE TRACKER
191, 192

FIG. 12

INSTRUCTION SYSTEM WITH EYETRACKING-BASED ADAPTIVE SCAFFOLDING

RELATED APPLICATION

This application claims the benefit of U.S. Provisional Application No. 61/602,434, filed on Feb. 23, 2012. The entire teachings of the above application are incorporated herein by reference.

The field of the invention relates to human computer interaction (HCI) in knowledge acquisition systems, and more specifically, eye-tracking for education or training systems.

BACKGROUND

Teaching and training can be difficult and time-consuming. Good teachers and instructors are usually in scarce supply and high student to teacher/instructor ratios prevent individualized instruction and thus are a barrier to deep learning. Tools to make each teacher/instructor more effective are desirable, as they can decrease the number of teachers/instructors required. These tools are especially valuable if they can also improve the quality of the education given to students, who are constantly pushed to learn more and do to learn it faster because of the ever-increasing economic demand for education/training.

The information that a learner acquires from a graphical interface is often measured by learning outcomes, or other indirect metrics. Eye-tracking offers a direct metric that can measure what the user attended to, i.e., read/viewed on the screen.

Visual displays, diagrams, and simulations are now widely used as information sources for learning in the media in order to convey important information, and at all levels of education for learning, rich problem-solving, and diagnosis (e.g., science, mathematics, electrical engineering, radiology, airport security, airplane navigation). Despite the proliferation of visual materials and the important role they play in knowledge dissemination and knowledge acquisition, surprisingly little is known about how information from visual information sources is acquired, or how their comprehension can be improved.

One of the principal complex issues with visual information sources is that they provide all information simultaneously; in direct contrast to more conventionally-used textual information sources which are structured sequentially. The implications of this are that the knowledge acquisition processes and comprehension processing of textual information follows the structure of the text (from the first word in the paragraph to the last). In the case of visual information sources, however, the processing of information is directed by the learner, that is, his/her attentional processes are guided in a systematic (or unsystematic) fashion to acquire the relevant information to complete the task at hand. It is known that prior domain knowledge is highly predictive of a user's visual search patterns and knowledge acquisition processes. For example, experts in architecture search through each 2-dimensional plan to best understand the 3-dimensional nature of the building, and medical experts systematically seek information in an x-ray to either confirm or disconfirm a diagnosis.

In the case of science learning, the underlying causal structure must be understood from the diagram; since all information is presented simultaneously, this, in the absence of prior knowledge, is a highly complex task. It was once believed that simply adding a diagram as an accompaniment to a text would improve learner's understanding; however, research has shown that novices do not know what is salient in the diagram, and in the case of highly conventionalized diagrams (e.g., topographical maps, VLSI diagrams, architectural maps, etc.), novices are not fluent enough with the symbol system to permit easy comprehension.

SUMMARY

Embodiments of the present invention address how an eye-tracking system can be used to evaluate learners' knowledge acquisition processes as well as improve learners' knowledge acquisition patterns so that they can systematically acquire information from text and diagrams in science or other topics (subject matter), since both (text and graphics/images) are commonly used in this and other domains. Using eye-tracking, the described systems and methods can obtain real time metrics of the user's knowledge acquisition patterns, and in turn, feedback can be provided to guide learners to attend to specific areas in the textual and visual information sources.

Embodiments provide computer-based instructional or training systems that employ eye-tracking based feedback. In one embodiment, a computer-based instructional or training system includes a digital processor supporting a user-interactive lesson and a display monitor rendering to a learner-user (i.e., trainee, student, or other knowledge acquiring user) screen views of the lesson. In that embodiment, one screen view may include text content in a certain locational arrangement relative to graphical content. The instructional/training system may be run in parallel with an eye-tracking member coupled to the processor. The eye-tracking member may track eye movement of the learner-user and detect eye traces of the learner-user during his/her reading of the screen views.

The detected eye traces may cause the computer system to compare the detected eye traces of the learner-user to an optimal (learning) predefined acquisition pattern. Based on the comparison, the instructional/training system may determine a need to assist the learner-user with a specific displayed area within the text or graphical content and provide a scaffold or other tutoring type supplement to guide the learner to specific areas(s) of the displayed content. For example, the system can check if a learner-user views "Figure 1" when the displayed screen view text says "See Figure 1". In one embodiment, the monitor may display and/or audibly render the tutoring-type supplement and scaffolds to the learner-user (including highlighting pertinent screen view areas, enunciating further instructions, etc.). For example, a tutoring-type supplement may include a graphical user interface animation. In one embodiment, the tutoring-type supplement or other instruction may include a combination of a scaffolding of screen views, hints to the learner-user and other user interactive tutoring techniques.

A computer-based tutoring system may include a processor configured to generate and display on a display monitor, to a student-user, a screen view having content in a certain arrangement. The tutoring system may also include an eye-tracking device coupled for communication to the processor. According to one embodiment, the eye-tracking device tracks eye movement of the student-user while the student-user reads the displayed content. Tracked eye movement may be outputted as eye traces to the processor. In one embodiment, the processor may be configured to compare the resulting eye traces to an optimal information acquisition path for the displayed content; determine from the comparison that the student-user needs assistance with reading or understanding the displayed content; and generate and output a tutorial supple-

ment for display to the student-user. In this manner, the processor provides tutor-like assistance to the student-user in a timely manner to assist the student-user with the displayed content.

As noted above, the computer-based tutoring system may use an optimal learning or acquisition pattern. An optimal (learning) acquisition pattern may be predefined for one screen view as a function of the certain locational arrangement of the text content and the graphical content of the screen view. The computer-based tutoring system may store in a database an indication of the optimal acquisition pattern for the one screen view. Other computer-based knowledge-acquisition systems having eye-tracking feedback are within the purview of those skilled in the art given the principals of the described systems and methods.

BRIEF DESCRIPTION OF THE DRAWINGS

The foregoing will be apparent from the following more particular description of embodiments, as illustrated in the accompanying drawings in which like reference characters refer to the similar parts throughout the different views. The drawings are not necessarily to scale, emphasis instead being placed upon illustrating embodiments.

FIG. **1** is a block diagram illustrating one embodiment of a network architecture for an intelligent tutoring system with eye-tracking-based scaffolding.

FIG. **2** is a block diagram illustrating an intelligent tutoring system with eye-tracking-based scaffolding.

FIG. **3** is a block diagram of a process flow according to one embodiment of the intelligent tutoring system with eye-tracking-based scaffolding.

FIGS. **4**A and **4**B include a diagram illustrating one embodiment of an eye-tracker device and a graphic representation of eye being tracked;

FIG. **5** is a graphic representation illustrating one embodiment of a user interface.

FIG. **6** is a graphic representation illustrating one embodiment of a user interface.

FIG. **7** is a graphic representation illustrating one embodiment of a user interface.

FIG. **8** is a graphic representation of a data visualization of information processing by an eye-tracking device according to one embodiment.

FIG. **9** is a flow diagram illustrating one process for the intelligent tutoring system with eye-tracking based scaffolding according to one embodiment.

FIG. **10** is a flow diagram illustrating one process for the intelligent tutoring system with eye-tracking based scaffolding according to one embodiment.

FIG. **11** is a block diagram illustrating one embodiment of an intelligent tutoring system.

FIG. **12** is a schematic view of a computer-based tutoring system embodying the present invention.

DETAILED DESCRIPTION

A description of embodiments follows.

FIG. **1** is a block diagram illustrating a network architecture for an instruction or training system (such as an intelligent tutoring system) **100** with eye-tracking-based scaffolding. The instruction or training system **100** with eye-tracking-based scaffolding includes an instruction system workstation **105** coupled to a display **107**. In one embodiment, the workstation **105** may include an eye-tracking hardware device **191**, eye-tracking application **192**, one or more sensors **193**, a remote/local network service **195**, and a subject application **196**. Examples of the subject application **196** include tutoring software, such as the Science ASSISTments environment **194** by Applicant, the Inq-ITS system, or learning management system (LMS). The subject application may employ a pedagogical agent or scaffolding component **198**, a graphical user interface **197** and/or a simulation environment **199**.

Workstation **105** may include instruction/training workstation(s) **109** connected through wired or wireless communications. The workstation **105** may also include one or more instruction/training devices **111**, **113** in communication over a network. An eye-tracking application **192** may be coupled with the subject application **196**. For example, an eye-tracking user interface and educational training content may be staged or stored on an application server **170** and presented through the application interface **197**. The eye-tracking application **192** may facilitate communications with one or more sensors (internal or external) **193** via the workstation **105**. In the tutoring system embodiment, the subject application **196** may include a tutoring application or similar program **194** by assignee Worcester Polytechnic Institute (WPI). The subject application **196** may include flash-based components for displaying content based on eye-tracking input.

An eye-tracking device or member **191**, **192** may include one or more psycho-physiological sensors **193** that can be used to detect affective states in the student. One or more sensors may include the eye-tracking sensor, an infrared sensor, a depth sensor, a motion sensor, an image sensor and/or the like. According to one embodiment, the sensors **193** may be used in combination with the eye-tracking hardware **191** or software to collect **192**, aggregate and analyze information associated with the student-user of the workstation **105**. These sensors may be calibrated to capture movement, e.g., movement of eyes across at least one screen view on the workstation display **107**.

A native or custom eye-tracking application **192** may facilitate communication from the eye-tracking member to a desktop computer, e.g., the workstation **105**, and one or more servers **130**. In one embodiment, the eye-tracking application **192** is in communication with one or more servers **130** from the provisioned remote/local services **150** to distribute processing loads. In one embodiment, the Workstation **105** may include an eye-tracking client **160**. One role of the client **160** is to process the data stream from the eyetracker **191**, **192** and determine whether the student-user (end-user or trainee) is reading out of order. If so, the client **160** may generate a scaffolding message as an XML string and write the message to a file on a server, e.g., the eye-tracking server **130**. In one embodiment, the client **160** may communicate with the server **130** through a mapped network drive of a network **120**.

In the tutoring system embodiment, the provisioned remote/local network service **150** may include a Science ASSISTments server or other such tutorial server (which may be distinct from a school webserver). In one embodiment, the Science ASSISTments server provides a pedagogical agent, (e.g., Rex the Dinosaur) and the educational content from the school webserver and displays (through tutoring server/system **170**) them online in the user interface **197**. When the tutoring system **100** displays the pedagogical agent **198** and the agent's speech bubble, a current scaffolding message may be visible to the student through the display **107**. In one embodiment, the student-user may replace or remove the scaffolding message **198** through interacting with an input/output device, e.g., a mouse. The replace or remove command may be transmitted to the user interface **197**.

The graphical user interface **197** may include screen views from a subject application **196**, such as the Science ASSISTments application **194** or other learning management appli-

cation, the eye-tracking application **192**, the pedagogical agent **198**, and/or the like. The user interface **197** may allow for the display, execution, interaction, manipulation, and/or operation of program components and/or system facilities through textual and/or graphical facilities. The user interface **197** provides a facility through which users (students and educators) may affect, interact, and/or operate computer-based tutoring system **100**. The user interface **197** may communicate to and/or with an intelligent tutoring engine **170**, **205** in FIG. **2**, described in more detail below, a component collection, and one or more Application Programmer's Interface(s) (APIs).

The simulation environment **199** may be a scientific or other simulation environment where a user may experience various topical demonstrations, perform scientific experiments or engage in microworld (virtual world) training activities. According to one embodiment, workstation **105** may also include a training simulation environment **199** for a variety of industries and professional trades. For example, the simulation environment **199** may include an instance of Science ASSISTments microworlds (e.g., in earth science, chemistry, biology) running in local memory of one or more instructional training workstations **105** and/or instructional training devices **111**, **113**.

The pedagogical agent **198** may include a character-based animation configured to display messages to a user through the tutoring application **196**. In one embodiment, the pedagogical agent **198** includes a combination of shockwave flash animations, which display a cartoon-like character. These animation files may be stored on the ITS workstation **105**, as a remote or local service **195**, on a school server for a non-limiting example, and/or on the eye-tracking server **130**. According to one embodiment, the eye-tracking application **192** may generate a scaffolding message **198** based on a comparison of an optimal (learning) acquisition pattern and input received from the eye-tracking member **191**. The scaffolding message **198** may be transmitted through the eye-tracking client **160**, one or more servers **130**, **170** or directly to the pedagogical agent **198**. When the pedagogical agent **198** receives the scaffolding message, the pedagogical agent **198** may read (enunciate), copy and render the scaffolding message to the display (and/or screen views) **107**. In one embodiment, the scaffolding message may be rendered as a speech bubble associated with the agent character.

As illustrated in FIG. **1**, ITS workstation **105** is in communication with a network **120**. Through a communications network, the ITS workstation **105** is accessible by remote clients (e.g., computers **109**, **111**, **113** with web browsers) of users. Network interfaces may employ connection protocols such as, but not limited to: direct connect, fiber optics, Ethernet (thick, thin, twisted pair 10/100/1000 Base T, and/or the like), Token Ring, wireless connection such as IEEE 802.11a-x, and/or the like. In one embodiment, the network **120** may provide for communications between and among the ITS workstation **105**, remote/local services **150**, an eye-tracking processing server **130**, an eye-tracking client **160**, tutoring engine (server) data store **170**, e.g., an ITS database and/or an eye-tracking database.

Provisioned remote/local services **150** may include network communications with a database, a server-based processing system for eye-tracking **130**, and/or other remote or local services, for example, authentication. In one embodiment, remote/local services **150** may include a cloud service. The cloud service may include a Platform-as-a-Service (PaaS) model layer, an Infrastructure-as-a-Service (IaaS) model layer and a Software-as-a-Service (SaaS) model layer. The SaaS model layer generally includes software managed and updated by a central location, deployed over the Internet and provided through an access portal. The PaaS model layer generally provides services to develop, test, deploy, host and maintain applications in an integrated development environment. The IaaS layer model generally includes virtualization, virtual machines, e.g., virtual servers, virtual desktops and/or the like.

The eye-tracking processing server **130** may include an eye-tracking server configured to receive eye-tracking data from one or more ITS workstations **105**, **109** or devices **111**, **113**. It should be noted that the term "server" as used throughout this application refers generally to a computer, other device, program, or combination thereof that processes and responds to the requests of remote users across a communications network. Servers serve their information to requesting "client(s)". The term "client" as used herein refers generally to a computer, program, other device, user and/or combination thereof that is capable of processing and making requests and obtaining and processing any responses from servers across a communications network. The eye-tracking processing server **130** may include a server-side client **160** in communication with ITS workstation-side client **105**, **109**, **111**, **113**, access to data store/tutoring engine **170** and a remote/local network service.

In one embodiment, the eye-tracking client **160** may be a program or set of programs running on the ITS workstation **105**, the eye-tracking processing server **130** or as a provisioned service **150** on the network **120**. In one embodiment, the eye-tracking client **160** may receive data from the ITS workstation **105** for processing on a local tutoring client, simulation environment through one or more remote/local network services **150** or Application Programmer's Interfaces (APIs). The eye-tracking client **160** may include real-time looping to check and track the student-user's eye position, determine which region is being viewed and generate scaffolding messages **198** when necessary. In one embodiment, this tracking and assisting response data may be stored in a data store **170** having one or more databases.

The tutoring server engine and data store **170** having one or more databases may be in communication with an eye-tracking client **160**. As illustrated in FIG. **1**, the network architecture of the invention system **100** may include an eye-tracking database and/or an ITS database at **170**.

FIG. **2** is a block diagram illustrating an intelligent tutoring system with eye-tracking-based scaffolding **200** embodying the principals of the present invention outlined above in system **100**. The intelligent tutoring system **200** may include an intelligent tutoring engine **205** (representative of tutoring engine **170** of FIG. **1** but in more detail). Intelligent tutoring engine **205** may include an eye-tracking component **215**, a simulation component **230**, a scaffolding component **240**, a pedagogical agent component **260**, a monitoring component **217**, a region component **233**, a user interface component **242**, and a network component **262**. Intelligent tutoring engine **205** and associated components may be in communication with a data store **210** (**170** in FIG. **1**). In one embodiment, the data store may be in communication with a network **220**, **120** (in FIG. **1**). As illustrated in FIG. **2**, intelligent tutoring engine **205** may transmit data from one or more components over the network **220** to the data store **210**.

Intelligent tutoring engine **205** may include one or more consolidated and/or integrated program components. Data may be communicated, obtained, and/or provided between and among these components in a variety of ways. For example, instances of components consolidated into a common code base from the program component collection may communicate, obtain, and/or provide data. This may be

accomplished through intra-application data processing communication techniques such as, but not limited to: data referencing (e.g., pointers), internal messaging, object instance variable communication, shared memory space, variable passing, and/or the like.

The eye-tracking component **215** may include an eye-tracking client **160** hosted on an eye-tracking processing server **130**; an eye-tracking application **192** running on one or more ITS workstations **105**, **109** and/or tutoring devices **111**, **113**; and/or an eye-tracking messaging component communicating between and among clients, servers, remote/local services and one or more components of the intelligent tutoring engine **205**. To start the eye-tracking application **192** on an ITS workstation **105**, a user may launch a web browser and navigate to an online location of the user interface on the tutoring application server, e.g., a Science ASSISTments server, then run the client. A monitoring component may also be running on the workstation to forward information from the eyetracker device or member **191**, **192** to a hosted eye-tracking client **160**.

The eye-tracking application **192**, (part of **215**) may be configured to reliably detect which area within a paragraph or part of an image a student is reading/viewing. In one embodiment, the eye-tracking application **192**, (**215**) may be calibrated to accurately determine the line of text or the specific word within textual content being viewed on display **107** by a student-user. With respect to graphical content, the eye-tracking application **192**, (**215**) may be calibrated to accurately determine a predefined specific area within an image (at **107**) being viewed by the student-user. The intelligent tutoring system **100**, **200** may configure the eye-tracking device **215** (**191**, **192** in FIG. **1**) to perceive a user's point of gaze onto the location of a region on the screen presenting screen views of the tutoring application **196**. In one embodiment, the point of gaze may be categorized based on information regarding content the user has satisfied, e.g., pre-requisite content.

In one embodiment, the eye-tracking component **215** may communicate with the eyetracker device or member **191**, **192** via wired and/or wireless protocols, such as, e.g., Ethernet, TCP/IP, USB, Wireless Fidelity (WiFi), Wireless Access Protocol (WAP), BLUETOOTH and/or the like.

Calibration of the eyetracker application **192** may be on a per student-user basis. In one embodiment, each student-user may store a previous calibration as a profile, loading the calibration on session startup. The calibration may also occur on a per session basis. To calibrate the eyetracker **215**, **191**, **192**, a user remains still while viewing a series of points, (e.g., nine) that appear at different locations on the screen (display **107**). The process may return a calibration error and a calibration percentage based on the number of points in the series. The calibration process may be repeated until the user and/or eye-tracking component **215** determine the calibration is sufficient.

The intelligent tutoring engine **205** may communicate and or receive communications with a simulation component **230** as part of the tutoring application **196** described in FIG. **1**. As noted above, the simulation environment **199** may be a scientific, industry specific or other simulation environment where a user may perform scientific experiments or other demonstrations. For non-limiting example, the simulation environment **199** may include an instance of Science ASSISTments application **194** running in local memory of one or more ITS workstations **105**, **109**, and/or tutoring devices **111**, **113**.

A scaffolding component **240** may facilitate communications (messages) to and from the student-user through one or more intelligent tutoring engine components or applications. For example, the scaffolding component **240** may transmit scaffolding messages to a simulation environment **199** through hint messages. The scaffolding message may be transmitted to the client **160**, one or more servers **130**, **170** or directly to the pedagogical agent **198** for display to the student-user through the workstation display **107**.

The pedagogical agent component **260** may include a character-based animation configured to display messages to a user generated by one or more tutoring engine **205** components. In one embodiment, the pedagogical agent component **260** may generate messages from the scaffolding component **240** as shockwave flash animations, which display a cartoon-like character. These animation files may be stored on the ITS workstation **105**, as a remote or local service **150**, on a school server and/or on the eye-tracking server **130**. When the pedagogical agent **198** receives the scaffolding message, the pedagogical agent **198** may read, copy and render the scaffolding message to the display **107**, e.g., the scaffolding message may be rendered as a speech bubble associated with the character.

The monitoring component **217** may receive eyetracking data from the eye-tracking component **215** (device **191** or eye-tracking application **192**). The tutoring engine may combine the eye-tracking data with information describing the regions in terms of location. The regions may also be described in terms of prerequisites. Upon processing the eye-tracking data with information describing regions, the monitoring component may generate one or more scaffolding messages to display to the user through the user interface, the tutoring application, and/or the pedagogical agent. The monitoring component may record eye movement while the eye-tracker application is running. The recorded eye movements may be combined with information about what is being displayed to the user at a particular point in time. With this combined information, the monitoring component may be utilized to generate a video illustrating contents of what is on the display screen **107** with circles (indicators) superimposed to show the user's point of gaze as time passes. A screenshot from one of these videos is shown in FIG. **8**.

The region component **233** includes functions defined to allow operations on the intelligent tutoring engine's representation of educational content, such as determining the prerequisites to be viewed by the student-user before an advanced content item is displayed. The region component **233** may also allow an educator-user to define or assign new content items as prerequisites to existing content, e.g., to develop a hierarchy of educational content. In one embodiment, the region component **233** may prompt an educator-user (a teacher or experimenter) to specify an educational content item as a prerequisite to a distinct educational content item. The region component may also include a region definer and a parser. The region definer details locations (i.e., coordinates) of areas/regions on a page or a screen view. The parser logically divides the page or screen view normalized (platform independent) into areas or regions for the region definer to specify/detail. The parser removes platform dependencies in specifying screen view coordinates so that the region definer data can be applied to various devices **111**, **113** and platforms **109** and corresponding display monitors **107**. In one embodiment, the region component **233** may permit the tutoring engine application **196** to accommodate one or more overlapping regions of content in the screen view of the display **107**. These overlapping regions may include a mixture of textual content and animated or graphical educational content.

The user interface component **242** may stores the system's **200**, **100** representation of content (in the screen view thereon) and the prerequisite relationships (order in which to

view) between content elements. In one embodiment, the user interface component **242** communicates with the region component **233** to properly render on display **107** educational content at predefined locations or areas in a screen view. The region component **233** specifies, element by element, screen view, or relative spacing positioning and the orientation among the content elements, or the like, as well as specifies the prescribed viewing order (order in which content elements are to be viewed/read by a student-user). To determine if a student is viewing the content elements out of order in the displayed screen view, the tutoring engine **205** may receive an internal representation of all the relevant content elements and their locations in the screen view from the region component **233**. In particular, this representation includes knowledge of where each piece of content is located in the screen view as well as its type (text or image/graphics) and prescribed viewing order.

The ITS **100**, **200** knowledge of which content elements (or piece of displayed content) the student has and has not viewed in a given screen view is dynamic, updating multiple times a second via the eye-tracker assembly **191**, **192** **193**. This allows the ITS **200** to respond quickly to out of order reading/viewing and to remove messages from the pedagogical agent's **198** speech bubble when they are no longer relevant.

The network component **262** may facilitate communications between and among intelligent tutoring engine components, as well as other components such as data aggregators. In one embodiment, the network component **262** may place tutoring engine **205** components in communication with one or more servers **130**, ITS workstations **105**, **109**, and/or provisioned remote/local services **150**. For example, the tutoring application **196**, eye-tracking client **160** and data store **210**, **170** may establish and transact communications through a shared or open API as defined by the network component **262**.

The data store **210** may be any suitable type of data storage device including, for example, a memory chip, hard drive, USB flash drive, remote accessible database, cache memory, and/or the like. The data store may be in communication with or place the intelligent tutoring engine **205** in communication with a network **220**. In one embodiment, the data store **210** may include a database for each tutoring engine component, an ITS database and/or an eye-tracking database at **170** as described in FIG. **1**.

FIG. **3** is a block diagram of a process flow **300** according to one embodiment of the intelligent tutoring system **100**, **200** with eye-tracking-based scaffolding. As illustrated in FIG. **3**, eye-tracker **310** (**190**-**193** of FIG. **1**, **215** of FIG. **2**) captures coordinates of gaze **320** by the student user and passes the coordinates of gaze to eye-tracking (ITS) client **330**, **160**. The eye-tracking client **330**, **160** through monitoring analysis **217** of FIG. **2** may responsively generate or transmit scaffolding message text **340** to a pedagogical agent **198** (FIG. **1**). The scaffolding message text **340** may be sent to a local/working server **350**. In one embodiment, the server **350** may include a school server and/or academic institution-based server **350**. The school server may forward the scaffolding message text **340** to a tutoring server **360** or workstation **105** running a tutoring application **196**, e.g., the Science ASSISTments application **194** (FIG. **1**). The Science ASSISTments application **194** may reside on the ITS workstation **105** of FIG. **1** or on a tutoring server **360**. The scaffolding message text **340** is presented to a student-user through a user interface **370** (**197**, **198** in FIG. **1**).

FIGS. **4**A-B are diagrams illustrating an eye tracker device, (of **191**, **193** of FIG. **1**), and an eye being tracked, respectively. FIG. **4**A is an eye tracker device **410** in embodiments of the present invention. FIG. **4**B is a representation of a user's pupil being tracked **420**. An eye-tracker device or member **410** (**191**, **193** FIG. **1**) may include an electro-optical sensor. In one embodiment, the eye-tracker creates a link from a computational system running on a computer (the ITS workstation **105**) to the physical world. By taking in physical information via this sensor and comparing it to an internal model of the world, the intelligent tutoring engine **205** makes decisions about how to act. The tutoring engine system **205**/**100**, **200** then responds to the sensor data by causing generation at display of on-screen scaffolding messages **340**, an effector that is not physical, but does have an effect on the physical world by altering the behavior of the student-user. Because system **100**, **200** follows this pattern of sense, makes decisions and acts in the physical world, the intelligent tutoring system is in effect a robot of sorts.

FIG. **4**B illustrates a process for eye-tracking according to one embodiment. The eye-tracking component **215** of FIG. **2** may use a technique called bright-pupil eye-tracking **420** in which an infrared beacon shown at the face causes the inside of the eyes to reflect large amounts of IR light. When viewed with an infrared camera converting to grayscale, the pupil **430** of the eye appears as the brightest points on the face. Because of the optical properties of the eye, one especially bright point appears within each pupil. This is the second Purkinje reflection **450**, the point at which light leaving the eye enters the cornea. The second Purkinje reflection point **450** moves about on the pupil **430** as the angle of the eye changes relative to the position of the IR beacon. By mounting the beacon in a flexed position to an infrared camera and calibrating software to detect the position of the Purkinje reflection **450** relative the pupil **430**, the eye-tracking component **215** may track the angle of the eyes at 60 Hz.

FIG. **12** shows an intelligent tutoring or other content management system **100**, **200**. The management system may comprise an eye-tracking scaffolding engine **205**, **170** in communication with a user station **105** and an eye-tracker assembly **191**, **192** over a network **120**. As illustrated in FIG. **12**, an eye-tracking scaffolding engine **205**, **170** includes a rules engine **1204**, a data abstraction module **1203**, a log processor **1200**, and a log storage database **210**.

A user interface **197** facilitates user interaction on the user station **105**. In one embodiment, RAW eye data (eye traces/gaze/fixations) is generated/served by the eyetracker assembly **191**, **192** in response to the interaction of a user with a predefined user interface (screen view) **197**. The user interface screen views are formed of any combination of text and graphics, including, but not limited to, training materials and/or educational content. In one implementation, the user interface **197** is a content aggregator for a tutoring application **196**, and pedagogical agent **198** provided (but not necessary) by the eye tracking scaffolding engine **205**, **170**. In one embodiment, the two (tutoring application **196** and agent/scaffolding **198**) are coded together using I-frames.

The log processor **1200** handles incoming logs of raw eye data from eyetracker assembly **191**, **192**. Incoming logs may include system and user metadata, e.g., information about the subject application **196**, user station **105**, timestamp and/or user level, user pace, user progression or the like. The log processor **1200** stores the logs in log storage database **210**. The log storage database can be any of the databases **170** of FIG. **1** (ITS and/or Eyetracking DB) or the data store **210** of FIG. **2**. In one embodiment the log storage database **210** is a separate database and only stores log information, such as system and user metadata.

A data abstraction module **1203**, processes log data and analyzes the log data against the current interface **197** or screen view. For example, a user's gaze may be determined to

be in/out of order based on user level. In one embodiment, the data abstraction module **1203** takes non-abstract (RAW data) e.g., eye-tracking traces comprised of eye movement coordinates, and transforms them into abstractions of the example form: user visited region one, region two, etc. Raw data may be combined with information about the subject application, user station **105**, timestamp and/or user level, user pace, user progression or the like. The log storage database can be any of the databases **170** of FIG. **1** (ITS and/or Eye-tracking DB) or the data store **210** of FIG. **2**. In one embodiment the log storage database is a separate database and only stores log information, such as system and user metadata.

The rules engine (or data mining algorithm) **1204** may receive abstract rules for analysis. The rules engine applies the rules or other algorithms to the abstractions received from module **1203** and may generate messages to a user, e.g., a user interactively engaged with user station **105**. In one embodiment, the rules engine may, based on the abstract rules, change the user interface (screen view) or store a diagnostic message for future use.

FIG. **12** further illustrates a data flow comprising one or more actions or steps for a content management system **194**, **170** with eye-tracking based scaffolding **205**. According to one embodiment, Step **0** may occur outside of the system **100**, when information from a tutoring system or any other content sources is rendered on a screen view and users gaze as the system scans the content, which is detected by the eye-tracking system **191**, **192**. Step **1** includes the transmission of eye-tracking data to the user station **105**, to which the eye tracker **191** is connected. According to one embodiment, step **2** includes the transmission of data (eye-tracking data or meta-data) over the network **120**, **220** to modules of the scaffolding engine **205**, e.g., the log processor **1200**. The log processor **1200** may include a SaaS based service processing log data and/or eye-tracking data from one or more user stations **105**, **109**, **111**, **113**. The log processor service **1200** may receive (step **3**) raw data transmitted from the user station **105** and/or eye-tracker **191**, **192**. According to one embodiment, step **4** may include logging raw data in database **210** and sending the logged RAW data to the data abstraction module **1203** for further processing. For example, the data abstraction module **1203** may include a region detector (e.g., monitoring component **217**) that detects where a user is and/or was reading/viewing. When abstract data is logged, the scaffolding engine **205** may transmit the logged abstract data to the rules engine **1204** (step **5**). According to one embodiment, the rules engine **1204** (step **6**) may provide an output in real-time, e.g., feedback to the user when necessary. The feedback may include scaffolding messages **340** and the like as described previously. The log file storage **210** stores an indicator of the rules engine **1204** content.

FIG. **5** is a graphic representation illustrating one embodiment of a user interface **600** (representative of GUI **197** and **198** in FIG. **1**) for an intelligent tutoring system **100**, **200** with eye-tracking-based scaffolding. The user interface **600** may include one or more regions. A textual region **610** may display text where a user is reading information about a particular topic or subject. A graphical region **620** may include graphical depictions supplementing the information in the text region **610**. In one embodiment, the graphical region **620** may include animations, data visualizations, simulations and/or interactive diagrams. The user interface **600** may further include a pedagogical agent **630** or scaffolding agent presenting scaffolding message text **340** (at **198** in FIG. **1**). The pedagogical agent **630** may present scaffolding message text when a user reads/views regions **610**, **620** out of order or does not read one or more of the predefined regions **610**, **620** in the user interface **600**.

User interface **600** (**197**, **198** of FIG. **1**) present educational content to a student-user. Educational content is designed to stimulate progressive model building in students whereby students develop rich understanding of the underlying system. In one embodiment, text starts at the top left of the screen to make it prominent to student-users. The order of concepts in the text serves as a guide for building a mental model. One or more images (graphical content items) may be associated with text that is near the images facilitates cognitive integration of all sensory input, such as, e.g., touch (ambient sensing) and taste, as well as auditory, textual and graphic content. For example, an animated simulation (at "show currents" in FIG. **5** and at **199** in FIG. **1**) of the motion of currents allows a student to enrich their mental model of plate tectonics. In this manner, the intelligent tutoring system **100**, **200** actively encourages in-order viewing of text **610** and images **620** to help the student build a comprehensive mental model.

For example, a student-user may simultaneously read the text **610**, view the diagrams **620**, and receive scaffolding messages **340**, **198**, and run a simulation **199**. As the student-user reads the display **107** screen-view, the eye-tracking component **215** continuously tracks the position of the student's eyes (view the detected Purkinje reflection point **450**). In one embodiment, the monitoring component **217** analyzes viewing patterns (or eye gaze traces) as derived by/generated from sensor (**410**, **191**, **193**) data and eye-tracking component **215** to detect if the student-user is reading/viewing the displayed content out of a pre-defined order. If the student-user begins to read out of order, the pedagogical agent **630**, **198** may intervene by displaying a scaffolding message **340** encouraging the student to more thoroughly view what he has missed. If the student-user reads the content thoroughly and in-order, the pedagogical agent **630**, **198** may not display a scaffolding message.

FIGS. **6** and **7** further illustrate the graphical user interface **600** for an intelligent tutoring system **100**, **200** with eye-tracking-based scaffolding. The textual region **610** may include one or more paragraph blocks. For example, the textual region **610** includes paragraph block A **720**, paragraph block B **722**, paragraph block C **724**, and paragraph block D **726**. As illustrated in FIG. **6**, paragraph block B **722** is located and in logical reading order after paragraph block A **720**. Similarly, paragraph block C **724** is located below paragraph block B **722** and paragraph block A **720**, and is in logical reading order after paragraph block B **722**. FIG. **6** further illustrates paragraph block D **726** is located below paragraph block C **724**, and is in logical reading order after paragraph block C **724**. In the example embodiment, paragraph block A through paragraph block D are in a vertically sequential viewing/reading orientation. FIG. **6** further illustrates graphical regions **620** being formed of images, e.g., a whole earth image **730** and an outer layer image **732** (Image **1** and **2** respectively in FIG. **7**).

Given the above, the example user interface screen view **600** presents (displays) sequence of paragraphs **810** and images. The example sequence **810** provides a first paragraph (e.g., paragraph A **720**), followed by image **1** (e.g., whole earth image **730**), followed by Paragraph **2** (e.g., Paragraph B **722**), followed by Image **2** (e.g., Outer layer image **732**), followed by Paragraph **3** (e.g., Paragraph C **724**) and ending with Paragraph **4** (e.g., Paragraph D **726**). Thus, a screen view user interface **600** includes a predefined set of regions (text and graphics/images) that a student-user is directed to read or view in a given order. As noted above, content elements may

be related by prerequisite relationships in the region component **233** representation based on a progressive model building approach. In the example of FIGS. **6** and **7**, the first paragraph is a prerequisite of the second paragraph, because the concepts in the former are necessary to understand the latter.

FIG. **8** is a graphic representation of a data visualization of information from eye-tracking device **410**, **191**, **193** according to one embodiment. FIG. **8** illustrates a text block **900** having text spaced and in a specific order **910**. A graphic diagram **920** of where a user's eyes fix on and how they move from one place to another in the example text block is depicted by circles and lines. The data visualization shows larger circles where the user's eyes spend more time and smaller circles where the user spends less time. The lines from one circle to another represent the movement of a user's eyes from one part of text to another.

As illustrated in FIG. **8**, a circle represents a fixation, a brief pause in eye movement when the user's gaze holds still. Lines connect fixations over time, showing the current fixation (with a bold border) and the last four fixations. The size of each fixation circle shows its duration. Fixations can be long but are usually very brief; even the longest fixation represented in this example may be less than half a second. In one embodiment, a heatmap data visualization may similarly represent overall dwell time of a user's gaze on a predefined region.

From the eye-tracking device **410** data/(sensor **193** data), eye-tracking software **192** and eye-tracking component **215** form eye gaze and eye traces information similar to the data visualization information of FIG. **8**. The eye-tracking component **215** passes the formed the form eye tracing/eye gaze information to monitoring component **217** while region component **233** passes to monitoring component **217** the content element representation of the region component **233** having contents type (text v. graphics) and relative viewing order information. Based on a comparison of these inputs (sensor derived eye traces of eye-tracking component **215** and content element representation of region component **233**), the monitoring component **217** determines whether or not the student-user is viewing or reading the displayed screen view **600** in the example, (user interface **197**) approximately. And based on a negative determination (meaning that the student-user is detected as not viewing/reading the display contents in pre-requisite order), monitoring component **217** generates a scaffolding message **198** for user interface **197** displayed on display **107**.

FIG. **9** is a flow diagram illustrating one process **1000** of an intelligent tutoring system **100**, **200** with eye-tracking-based scaffolding. The intelligent tutoring system may render to a student-user screen views of a lesson, at least one screen view having text content in a certain locational arrangement relative to graphical content **1005**. In one embodiment, the process flow **1000** may include tracking eye movement of the student-user viewing the one screen view and detecting eye traces of student-user for the one screen view **1010**. The intelligent tutoring system **100**, **200** may compare detected eye traces of the student-user to an optimal (learning) acquisition pattern predefined for the one screen view **1015**. As illustrated in FIG. **9**, the ITS **100**, **200** may determine a need to assist the student-user with the content of the one screen view and provide a tutoring type supplement **1020**. The tutoring system **100**, **200** may also display the tutoring-type supplement at least in the one screen view **1025**. In one embodiment, the tutor-type supplement may be displayed in more than one screen. For example, a tutor-type supplement may be displayed across tutoring devices for a given class or grade level.

FIG. **10** is a block diagram illustrating one process **1100** of an intelligent tutoring system **100**, **200** with eye-tracking-based scaffolding. The process employed by ITS **100**, **200** with eye-tracking based scaffolding may include generating and displaying on a display monitor **107**, to a student-user, a screen view having content in a certain arrangement **1105**. For example, content may be arranged according to regions as indicated in FIGS. **5-7**. In one embodiment, the intelligent tutoring system **100**, **200** may track eye movement of the student-user while the student-user reads the displayed content, resulting in eye traces **1110**.

The ITS may store the tracked eye movement in a data structure (at **170** in FIG. **1**) describing the eye traces. For example, the eye traces data structure may include attributes such as a user_id, a workstationID, a teacherID, a subjectID, a topic and/or the like. The eye traces data structure may also include attributes describing the temporal fixation for a user's gaze on a given region, such as a textual region or a graphical region. A temporal fixation data structure may be stored with reference to a location and a time. Location may include an eye trace location, i.e., where the eye is focused on the screen and what is being displayed at the time of fixation. In one embodiment, the location may also include the geographical location of the user, workstation, school, district and/or the like. Time associated with the temporal fixation may be stored as a time of fixation and/or a duration time. Time of fixation indicates the time when the student-user was looking at a predefined location. Duration may be may be stored in milliseconds, seconds, minutes or any other suitable measurement of time.

In one embodiment, the intelligent tutoring system **100**, **200** may indicate (output) the traces to a processor **1115**. For example, the processor may include a virtualized processor running the tutoring application **196** on the ITS workstation **105** of FIG. **1**. The eye-tracking device **191-193** (**410** of FIG. **4**) may be connected to a board through a Universal Serial Bus (USB) Interface providing for bidirectional communication with the hardware processor.

At step **1120**, the process **1100** of intelligent tutoring system **100**, **200** compares the resulting traces to an optimal information acquisition path for the displayed content. In one embodiment, the intelligent tutoring system **100**, **200** may perform a check to determine if the student-user needs assistance **1125**. If assistance is not needed, the process for intelligent tutoring may return to further track eye movement of the student-user **1110**. If the ITS **100**, **200** determines assistance is needed, the process may generate an output tutorial supplement for display to the student-user in a timely manner to assist the student user with the displayed content **1130**. For example, the ITS **100**, **200** may provide a tutorial supplement in real-time if the student viewing/eye traces on fixations exceeds a predetermined threshold, e.g., if the duration of temporal fixation for a given content item or region (screen view) exceeds a standard duration.

FIG. **11** is a block diagram illustrating one embodiment of an intelligent tutoring system ITS platform **1200** with eye-tracking-based scaffolding. The ITS Platform may serve to aggregate, process, store, search, serve, identify, instruct, generate, match, and/or facilitate interactions with a computer. As illustrated in FIG. **11**, the computer system may include a data store **1231**. The data store may be running an operating system, and include one or more component(s) **1235**, a database **1237**, a server application **1239**, and a user interface. The computer system may be coupled or paired to

an eye-tracker member or device **410** (**191-193** in FIG. **1**). In one embodiment, the computer system may include an intelligent tutoring system (ITS) **100**, **200**. As illustrated, the ITS platform may provide for eye-tracker device **410** and ITS **100**, **200** integration. For example, the ITS platform may maintain a common codebase to permit development of an integrated tutoring system.

Typically, users, which may be students, trainees, learners may engage information technology systems (e.g., computers) to facilitate information processing. In turn, computers employ processors to process information; such processors may be referred to as central processing units (CPU). One form of processor is referred to as a microprocessor. CPUs use communicative circuits to pass binary encoded signals acting as instructions to enable various operations. These instructions may be operational and/or data instructions containing and/or referencing other instructions and data in various processor accessible and operable areas of memory (e.g., registers, cache memory, random access memory, etc.). Information systems may be used to collect data for later retrieval, analysis, and manipulation, which may be facilitated through a database program **1237**.

Network card(s) may accept, communicate, and/or connect to a communications network **1220**. Through a communications network **1220**, the PC Platform is accessible through remote clients (e.g., computers with web browsers) by users. Network interfaces may employ connection protocols such as, but not limited to: direct connect, Ethernet (thick, thin, twisted pair 10/100/1000 Base T, and/or the like), Token Ring, wireless connection such as IEEE 802.11a-x, and/or the like.

Input Output interfaces (I/O) may accept, communicate, and/or connect to user input devices, peripheral devices, cryptographic processor devices, and/or the like. The video interface composites information generated by a computer system and generates video signals based on the composited information in a video memory frame. Peripheral devices may be connected and/or communicate to I/O and/or other facilities of the like such as network interfaces, storage interfaces, directly to the interface bus, system bus, the CPU, and/or the like. Peripheral devices may be external, internal and/or part of ITS Platform. Peripheral devices may include: antenna, audio devices (e.g., line-in, line-out, microphone input, speakers, etc.), cameras (e.g., still, video, webcam, etc.), dongles (e.g., for copy protection, ensuring secure transactions with a digital signature, and/or the like), external processors (for added capabilities; e.g., crypto devices), force-feedback devices (e.g., vibrating motors), network interfaces, printers, scanners, storage devices, transceivers (e.g., cellular, GPS, etc.), video devices (e.g., goggles, monitors, etc.), video sources, visors, and/or the like. Peripheral devices often include types of input devices (e.g., cameras).

Embodiments may also be implemented as instructions stored on a non-transitory machine-readable medium, which may be read and executed by one or more processors. A non-transient machine-readable medium may include any mechanism for storing or transmitting information in a form readable by a machine, e.g., a computing device **1203**. For example, a non-transient machine-readable medium may include read only memory (ROM); random access memory (RAM); magnetic disk storage media; optical storage media; flash memory devices; and others.

While this invention has been particularly shown and described with references to example embodiments thereof, it will be understood by those skilled in the art that various changes in form and details may be made therein without departing from the scope of the invention encompassed by the appended claims.

For example, the eye-tracking-based learning and tutoring principles of the present invention may be employed in training processes in various industries. One such example is training of airport baggage screening and security tasks. A security personnel in training on baggage inspection logs into the invention system **100**, **200** and begins examining test bags via x-ray machine monitor. The pertinent regions of the monitor screen view are predefined by region component **233** as described above. Eye-tracking device **410**, **191-193** sense and obtain eye traces of personnel in training The monitoring component **217** determines whether the training application **196** user interface **197** needs to indicate to the trainee that he/she has missed viewing and inspection points/particulars (equivalent to target/optimal predefined eye fixations and movement). Additionally, a log file **210** may save and store the tracked eye movements per trainee. The test passenger bag may have an identifier tag that is associated with the log file **210** of the trainee. The log file **210** may store the tag identifying information so that a trainer or other user can identify which security employee missed which inspection points/particulars being tested or demonstrated by the subject bag.

In the real-time mode, outside of training, the eye-tracking adaptive scaffolding system may provide pertinent messages to the end-user (inspector/instructor) during bag inspection. For example, the system may indicate to the end-user that according to analysis detected eye movements thus far, the end-user needs to open 'read' (gaze, view, etc.) a certain region area of the x-ray monitor to ensure thorough inspection of the subject bag.

In other examples, the rules engine **1204** may include data mining of prior user reading activity/sessions as recorded in log files of data storage **210**. The data mining algorithms may result in a scaffolding message **340** adapted accordingly (per user, per viewing/reading attempt, per user level, per stage of acquisition, etc.).

Without limitation, the subject application may be defined for health professional training, where the trainees may include radiology technicians, nurses, physical therapists, residents, medical students, physicians, surgeons, and/or the like. For example, a resident-trainee may use the subject application to view medical content items associated with a given patient. Medical content items may include an x-ray, a CAT scan, an angiogram, an MRI, PET scan, a nuclear scan, a radioactive isotope labeling, patient summary, patient history, patient biographics and/or the like. In one embodiment, the resident-trainee may use the subject application in pathology, where the user station may present a set of slides, for example slides of tumors. The instructional system may determine whether the resident-trainee viewed the proper portions or regions of the slides to determine whether or not a specific cancer is present.

Medical content items, such as the x-ray, CAT SCAN, and MRI, (Complete Blood Count) CBC report, an Electrocardiogram (EKG), an Electroencephalography report (EEG), blood saturation report, oxygen saturation report, dialysis report, etc., may be tagged or labeled by the instructional system (by an instructor-user, expert-user) to define regions or areas the resident-trainee reads/views prior to providing a prognosis. If the subject application determines the resident-trainee has not viewed/read the patient summary or the patient history, the subject application may block the resident-trainee from entering a prognosis into the system.

Embodiments of the training system provide real-time error correction. Similarly embodiments used outside of training provide real-time error correction. The real-time error correction may be provided to a learner/trainee or non-trainee user through a pedagogical agent, modifications to a graphical user interface and/or the user interfaces objects/controls, messages (e.g., text messages, audible messages, graphical messages). In one embodiment, the subject application provides real-time error correction for a surgeon-trainee or non-trainee surgeon performing surgery. For example, the user station **105** may monitor patient vitals and present an error-correcting message to the surgeon-trainee/other surgeon user when the patient's blood pressure, heartrate, and the like exceed a predetermined threshold.

What is claimed is:

1. A computer-based knowledge acquisition system, comprising:

a digital processor supporting a user-interactive training material;

a display monitor coupled to the processor and rendering to an acquirer-user screen views of the training material, at least one screen view having text content in a certain locational arrangement relative to graphical content; and

an eye-tracking member coupled to the processor, the eye-tracking member (i) tracking eye movement of the acquirer-user viewing the one screen view, and (ii) detecting eye traces of the acquirer-user for the one screen view;

in response to the detected eye traces, the processor comparing the detected eye traces of the acquirer-user to an optimal (learning) acquisition pattern predefined for the one screen view, and

based on the comparison, the processor determining need to assist the acquirer-user with the content of the one screen view, and the processor providing a tutorial supplement to the acquirer-user,

wherein the display monitor further displays the tutorial supplement at least in the one screen view.

2. A computer-based knowledge acquisition system as claimed in claim **1** wherein the optimal (learning) acquisition pattern is predefined for the one screen view as a function of the certain locational arrangement of the text content and the graphical content of the screen view.

3. A computer-based knowledge acquisition as claimed in claim **1** further comprising a database storing an indication of the optimal acquisition pattern for the one screen view.

4. A computer-based knowledge acquisition system as claimed in claim **1** wherein the tutorial supplement is a graphical user interface animation.

5. A computer-based knowledge acquisition system as claimed in claim **4** wherein the tutorial supplement employs any combination of scaffolding of screen views, hints to the acquirer-user and other user interactive acquisition techniques.

6. A computer-based knowledge acquisition system, comprising:

a processor configured to generate and display on a display monitor, to a acquirer-user, a screen view having content in a certain arrangement;

an eye-tracking device coupled for communication to the processor, the eye-tracking device tracking eye movement of the acquirer-user while the acquirer-user reads the displayed content, the tracked eye movement resulting in eye traces, and the eye-tracking device communicating (outputting) the eye traces to the processor;

wherein the processor is configured to:

(i) compare the resulting eye traces to an optimal information acquisition path for the displayed content,

(ii) determine from the comparison that the acquirer-user needs assistance with reading or understanding the displayed content, and

(iii) generate and output a tutorial supplement or other indication for display to the acquirer-user, the processor outputting through the display monitor the generated tutorial supplement or other indication in a graphical user interface of the screen view such that the processor provides real-time assistance to the acquirer-user with the displayed content.

7. A method, comprising:

rendering to an acquirer-user screen views of the lesson, at least one screen view having text content in a certain locational arrangement relative to graphical content;

tracking eye movement of the acquirer-user viewing the one screen view;

detecting eye traces of the acquirer-user for the one screen view;

comparing the detected eye traces of the acquirer-user to an optimal (learning) acquisition pattern predefined for the one screen view;

based on the comparison, determining need to assist the acquirer-user with the content of the one screen view;

providing a tutorial supplement to the content, wherein a display monitor further displays the tutorial supplement at least in the one screen view.

8. The method of claim **7** wherein the optimal (learning) acquisition pattern is predefined for the one screen view as a function of the certain locational arrangement of the text content and the graphical content of the screen view.

9. The method of claim **7**, further comprising:

storing an indication of the optimal acquisition pattern for the one screen view.

10. The method of claim **7**, wherein tracking eye movement includes calibrating an eye-tracking member with an instructional computer-based application.

11. The method of claim **7**, wherein calibrating the eye-tracking member with the instructional computer-based application is on a per user basis.

12. The method of claim **7**, wherein providing the tutorial supplement to the content includes providing a character-based animation.

13. The method of claim **7**, further comprises:

supporting a user-interactive lesson with the tutorial supplement in more than one format, the format including text format or graphical format;

determining a given format the acquirer-user responds to and generating the tutorial supplement in the given format.

14. The method of claim **13** wherein the user-interactive lesson is a scholastic lesson, a training exercise or other subject-based instruction.

15. The method of claim **7**, wherein the optimal (learning) acquisition pattern is based, at least in part, on pre-requisite completion of content items.

16. The method of claim **15**, wherein the pre-requisite completion of the sequence of content items is specified in a file stored in association with a user-interactive lesson.

17. The method of claim **13**, wherein the user-interactive lesson includes training material.

18. The method of claim **7** wherein the acquirer-user is a student-user, a trainee, or other learner.

19. The method of claim 7 wherein providing the tutorial supplement to the content further includes altering or modifying user interface controls.

20. The method of claim 7 wherein providing the tutorial supplement to the content further includes transmitting a command to one or more networked peripheral devices.

* * * * *